ELABORATION AND EMPIRICAL EVALUATION OF THE DE GOEDE LEARNING POTENTIAL STRUCTURAL MODEL

RICHELLE BURGER

Thesis presented in partial fulfilment of the requirements for the degree of Master of Commerce in the Faculty of Economic and Management Sciences at Stellenbosch University

PROF. C.C. THERON AND DR. G GöRGENS

MARCH 2012

DECLARATION

By submitting this thesis electronically, I declare that the entirety of the work contained therein is my own, original work, that I am the sole author thereof (save to the extent explicitly otherwise stated), that reproduction and publication thereof by Stellenbosch University will not infringe any third party rights and that I have not previously in its entirety or in part submitted it for obtaining any qualification.

Signed:

Richelle Burger **Date:** March 2012

OPSOMMING

Suid-Afrika se verlede het gestalte gegee aan die wyse waarop Menslike Hulpbronbestuur na die toekoms behoort te kyk. Suid-Afrika het ’n geskiedenis van rassediskriminasie wat deur die Apartheidstelsel aangevoer is. Die gevolge van die verlede het die lede van die voorheen agtergeblewe groep met onderontwikkelde werkbevoegdheidspotensiaal gelaat. Dit het vervolgens gelei tot nadelige impak in geldige, billike (in die Cleary-sin van die woord) streng bo-na-onder keuring. Die fundamentele oorsaak van swart onderverteenwoordiging in hoër-vlak posisies is tot ‘n groot mate te wyte aan die nalentskap van die vorige politieke bedeling. Die kernprobleem is dat Suid-Afrika se intellektuele kapitaal nie nou of voorheen eenvormig oor die rasse heen ontwikkel en versprei is nie.

Die huidige situasie moet hanteer word, nie net omdat dit potensieel onbestendig mag word nie, maar ook bloot omdat dit die regte ding is om te doen. Dié individue uit ‘n voorheen agtergeblewe groep wat wel die vermoë het om te leer, behoort geïdentifiseer en vervolgens ontwikkel te word. Dus bestaan daar in Suid-Afrika ’n behoefte aan ’n metode om individue te identifiseer wat ’n hoë leerpotensiaal het en derhalwe die meeste voordeel sal trek uit geleenthede vir regstellende ontwikkeling, veral dié geleenthede van ’n veeleisende kognitiewe aard. Daar bestaan voorts ook ’n behoefte om omstandighede te reël om die prognose te optimaliseer dat diegene wat met leerpotensiaal geïdentifiseer is, hul potensiaal suksesvol sal kan verwesenlik. Leerprestasie word deur ‘n komplekse netwerk van veranderlikes bepaal. Om die negatiewe gevolge van die verlede in Suid-Afrika deur regstellende ontwikkeling aan te spreek, moet die determinante van leerprestasie verstaan word. Versnelde regstellende ontwikkeling sal doeltreffend wees in dié mate waartoe ’n omvattende begrip bestaan van die faktore onderliggend aan leerprestasie en die wyse waarop hulle kombineer om leerprestasie te bepaal.

Die primêre doelwit van hierdie studie was gevolglik om de Goede (2007) se leerpotensiaal-strukturele model uit te brei. Nie-kognitiewe faktore is tot de Goede (2007) se model toegegevoeg om ’n meer indringende begrip van die kompleksiteit

onderliggend aan leer en die determinante van leerprestasie te verkry. ’n Subversameling van die voorgestelde leerpotensiaal-strukturele model is vervolgens empiries geëvalueer. Die aanvanklike gereduseerde model het nie gekonvergeer nie en is vervolgens hersien deur ’n enkele kousale baan uit die model te verwyder. Die bevinding was dat die hersiene model die data goed pas. Alle bane in die finale model is empiries bevestig. Voorstelle vir toekomstige navorsing is gemaak deur aan te dui hoe die model verder uitgebrei kan word.

ABSTRACT

South Africa's past has shaped the way Human Resource management should look to the future. South Africa has a history of racial discrimination that was lead by the Apartheid system. The effects of the past have left members of the previously disadvantaged group with underdeveloped job competency potential. This has subsequently led to adverse impact in valid, fair (in the Cleary sense of the term) strict-top-down selection. The fundamental cause of Black under-representation in higher level jobs is due to the legacy of the previous political dispensation. The root problem is that South Africa's intellectual capital is not, and has not been, uniformly developed and distributed across races.

The current situation must be dealt with not only as the situation could potentially become volatile, but also as it is simply the right thing to do. Those individuals from the previously disadvantaged group that have the potential to learn should be identified and subsequently developed. A need therefore exists in South Africa for a method to identify individuals who will gain maximum benefit from affirmative developmental opportunities, especially cognitively demanding development opportunities, and hence display a high potential to learn. A need in addition exist to arrange circumstances to optimise the prognosis that those identified with learning potential will successfully realise their potential. Learning performance is complexly determined. To successfully address the negative effects of the past in South Africa through affirmative development the determinants of learning performance need to be understood. Accelerated affirmative development will be effective to the extent to which a comprehensive understanding exists of the factors underlying learning performance and the manner in which they combine to determine learning performance.

The primary objective of this study consequently was to expand on De Goede's (2007) learning potential structural model. Non-cognitive factors were added to the De Goede (2007) learning potential structural model in order to gain a deeper understanding of the complexity underlying learning and the determinants of learning

performance. A subset of the hypothesised learning potential structural model was then empirically evaluated. The initial reduced model failed to converge and was subsequently revised by deleting a single causal path from the model. The revised model was found to fit the data well. All paths contained in the final model were empirically corroborated. Suggestions for future research are made by indicating how the model can be further elaborated.

ACKNOWLEDGEMENTS

I would firstly like to thank my mom who was the one who suggested I study Industrial Psychology. She supported me from day one in every way she could and for that I am truly grateful and extremely thankful. I would also like dedicate this thesis to her.

Secondly, I would like to thank my supervisor, Professor Theron, a man of true integrity, who served not only as an inspirational lecturer and supervisor but as a role model who leads by example. It has been an absolute honour to have worked with 'Prof. Theron'. His incredible commitment and dedication to his students, strongly evident through his meticulous marking, among other things, allowed me to constantly learn and improve myself and aided me in reaching far beyond what I thought was possible.

I would also like to thank Dr. Görgens for her contribution as well as all the schools (principals, teachers and learners) who participated in the study and inevitably made the study possible.

Lastly, I would like to thank Rolene Liebenberg for her altruistic helpfulness and incredible efficiency.

Dedicated to my mother, Diana Burger

CONTENTS

LIST OF TABLES

LIST OF FIGURES

CHAPTER 1
INTRODUCTORY ARGUMENT

1.1 INTRODUCTION

The introductory section presents the research objective as well as an explanation as to why the research objective is considered relevant and important for the discipline and practice of Human Resource Management and Industrial Psychology in South Africa.

Organisations are formed so that society may accomplish goals, which would be impossible, if everyone acted individually. The main reason that organisations exist is to produce goods and deliver services in a productive manner, so that real economic value is added to the benefit of shareholders, the government and the broader community. Organisations have a major responsibility towards society and equity holders to efficiently combine and transform scarce factors of production into high quality products and services with economic utility.

However, to succeed in this goal organisations require competent employees. The extent of success with which an organisation creates value is largely dependent on humans who are the carriers of the production factor. Labour is the life giving production factor through which the other factors of production are mobilised and thus represents the factor which determines the effectiveness and efficiency with which the other factors of production are utilised (Gibson, Ivancevich & Donnelly, 1997). Human capital is a vital and indispensable resource for organisational effectiveness. The quality of the human resources the organisation has at its disposal, affects the efficiency with which organisations produces products and/or services. For this reason organisations have to seek the best employees, invest in their training and development and create a working environment conducive to high employee work performance if they wish to succeed. The Human Resource practitioner or Industrial/Organisational psychologist's ability to professionally regulate the entry of employees into the organisation through sound selection

practices, to further polish the performance capability of the selected individuals and to create a work environment that encourages high work performance, is therefore imperative.

The Human Resource function represents one of the organisational functions. The Human Resource function justifies its inclusion in the spectrum of organisational functions through its commitment to contribute towards the organisations goals through interventions that affect employee performance in such a manner that the monetary value of the improvement in performance exceeds the investment required to affect the improvement in performance. This function seeks to contribute towards organisational goals through the attainment and maintenance of a competent and motivated workforce, as well as the effective and proficient utilisation of such a workforce (Nel, Gerber, Van Dyk, Haasbroek, Schultz, Sono & Werner, 2001). This is attained through a Human Resource strategy derived from, and aligned with, appropriate business strategy in a manner that contributes to competitive advantage (De Goede & Theron, 2010).

In order for the Human Resource function to attain and maintain a competent workforce, the factors that contribute to an employee being competent must be identified and understood through empirical research. Research, in the field of Human Resources or Industrial/Organisational Psychology, is conducted in order to formulate credible psychological explanations of the behaviour of working man in order to positively influence it. This research is possible as the behaviour of working man is not random. The performance of working man is the systematic expression of a complex nomological network of influencing variables characterising the individual and his or her working environment. Credible and valid theoretical explanations for the different facets of the behaviour of working man constitute a fundamental and indispensable, though not sufficient, prerequisite for efficient and equitable Human Resource Management (De Goede & Theron, 2010).

Research of the behaviour of working man and subsequent interventions to positively influence the behaviour of working man in South Africa is unavoidably influenced by South Africa's socio-political past. South Africa's socio-political past has confronted the discipline of Industrial/Organisational psychology and the Human

Resource and/or Industrial/Organisational psychology function with an array of unique theoretical and practical HR challenges. These challenges fundamentally arise from the fact that South Africa's socio-political past has affected the standing of those who were disadvantaged by the previous political dispensation on many of the competency potential latent variables required to succeed in the world of work.

South Africa has a history of racial discrimination that was lead by the Apartheid system. Apartheid was a system of legal racial segregation enforced by the National Party government of South Africa between 1948 and 1993, under which the rights of the majority 'non-white' inhabitants of South Africa were curtailed and a minority rule by White South Africans was maintained. The system of Apartheid was designed to benefit Whites and disadvantage Blacks. Blacks is a generic term which refers to Black Africans, Coloureds, Indians and Chinese who have been South African citizens prior to 1994, now called the previously disadvantaged group. Feuerstein (1979) defined *disadvantaged* broadly as including poverty, lack of access to enriching activities, inadequate parental attention and care and poor quality of education (Taylor 1989).

A great variety of discriminative legislation not only deprived the previously disadvantaged group from the opportunity to acquire skills, but also forced them to do unskilled work. Perhaps the greatest disadvantage of the Apartheid system was that the disadvantaged group was deprived of opportunities to accumulate human capital. Human capital is defined as the productive investments in humans, including their skills and health, which are the outcomes of education, healthcare and on-the-job training (Todaro, 1994). Education in South Africa was segregated by means of the 1953 Bantu Education Act, which crafted a separate system of education for Black students and denied them access to education and other developmental opportunities that White students were afforded. For the first three quarters of the century, social spending on education, pensions, and other social benefits on the disadvantaged group was, per capita, more or less eight to ten times smaller than on Whites. In 1970, the per capita spending on White education was twenty times higher than the per capita spending on the previously disadvantaged group (Verwoerd, 1999).

The effects of the past have left the previously disadvantaged group members with underdeveloped competency potential, as opposed to the not previously disadvantaged group members, and this has subsequently led to adverse impact in valid, fair (in the Cleary sense of the term) strict-top-down selection.

Adverse impact in personnel selection refers to the situation where a selection strategy affords members of a specific group a lower probability of being selected than members of another group. Adverse impact exists when there is a substantial difference in the selection ratios of groups that work to the disadvantage of members belonging to a certain group (Guion, 1998). A selection ratio for any group, which is less than four-fifths (4/5) or 80 percent of the ratio of the group with the highest selection ratio would typically be regarded as evidence of adverse impact (Maxwell & Arvey, 1993). The four-fifth rule should be calculated with reference to the predicted/expected criterion distributions (De Goede & Theron, 2010). Valid selection procedures, used in a fair, non-discriminatory manner that optimises utility, very often result in adverse impact against members of previously disadvantaged groups. Adverse impact in personnel selection aggravates the effect of socio-political discrimination. Advantaged groups will be even more advantaged, being selected for and gaining access to more development opportunities, while disadvantaged groups will be more disadvantaged and denied opportunities to develop the necessary coping strategies, knowledge, skills and abilities (Boeyens, 1989).

The critical question to consider, however, is why selection procedures create adverse impact? The fact that adverse impact is created during the personnel selection process should not be interpreted as evidence that the selection procedure is responsible for the adverse impact. If the problem of adverse impact is not created by the selection procedure the solution to the problem should not be sought in the selection procedure as such. In answering the critical question as to why selection procedures create adverse impact, it should be noted that selection decisions are based on criterion inferences derived from predictors. The fundamental cause of the adverse impact created by the performance-maximising fair use of valid predictors in selection in South Africa is, therefore, the difference in the means of the criterion distributions of previously disadvantaged and not previously disadvantaged groups (De Goede & Theron, 2010).

The manner in which the human resource function should respond to the problem of adverse impact should account for and address the root cause of the problem and not merely the symptoms. It is argued that the fundamental cause of Black under-representation in higher level jobs is not due to flaws in selection procedures and/or selection instruments. The underrepresentation is due to the legacy of the previous political dispensation. The root problem is that South Africa's intellectual capital is not, and has not, been uniformly developed and distributed across races. In the South African context it does not seem unreasonable to attribute the systematic differences in criterion distributions to socio-political conditions that inhibited the development and acquisition of the skills, knowledge and abilities of the previously disadvantaged group required to succeed in the workplace. During the Apartheid era, and even now in the new democratic South Africa, the not previously disadvantaged group had, and still have, easier and more access to opportunities which has allowed them to develop the competencies and competency potential (Saville & Holdsworth, 2000, 2001) required to succeed in the workplace. Access to such opportunities often has the resultant effect that such individuals perform better in conventional assessment situations, in the workplace and in training programmes or educational institutions (Boeyens, 1989; Hamers & Resing, 1993; Taylor, 1989, 1992). Assessments that report standardized mean score differences between ethnic groups on especially measures of cognitive abilities should, therefore, not be blamed for the problem, but rather seen as unbiased messengers relatively accurately conveying the consequences of a tragic social system. According to De Goede (2007), shifting the blame for the under-representation of the previously disadvantaged groups in the formal labour market to the failure of psychological assessments to offer equal chances of being selected for a job is counterproductive and does not really help to find a constructive solution to the problem. To deny the predictor differences and its impact is to deny the history that caused it. In the South African context, searching for alternative selection instruments would be a tragically inappropriate response to the problem of adverse impact (De Goede & Theron, 2010).

Human Resource Practitioners and Industrial Psychologists' response to the problem should reflect this and should not attempt to blame the selection tools for the

problem. Furthermore, Human Resource Practitioners and Industrial Psychologists and the various private and public sector stakeholders need to urgently make a concerted effort to address the adverse impact problem and the imbalances.

Since 1994 there has been a deliberate attempt by the new government to correct the imbalances created by the Apartheid government.[1] The newly elected government embarked on an elaborate process geared towards the redistribution of economic, social, cultural and political power and resources in order to rectify the inequalities of Apartheid.[2] In the years since the abolishment of Apartheid significant progress was made towards transforming the unequal society and considerable

[1] Social welfare and poverty eradication interventions have been high on the policy agenda for the government (Hoffman, 2007). In 2006, the government launched the Accelerated and Shared Growth Initiative for South Africa to address key constraints that inhibit accelerated and broadly shared economic growth. The Accelerated and Shared Growth Initiative for South Africa (ASGISA) holds that improvements in living standards are to be shared by all segments of society, in particular the poor. Part of the rationale underlying the ASGISA is that through improved educational access which should equip a portion of the population with sufficient skills enough economic growth could be generated in a way that also benefits those who do not get access to those skills. Although some progress has been made objectives are not being reached partly due to incapacity within state departments.

Additionally, the Joint Initiative on Priority Skills Acquisition (JIPSA) is a collaborative programme of the government, business and labour stakeholders. The rationale behind Government's Joint Initiative on Priority Skills Acquisition (JIPSA) is the belief that the education system, as well as skills development, can contribute to economic growth and development**.** Additionally, the state of this system affects the achievement of the various targets set out in the ASGISA national plan. JIPSA has attempted to translate the aggregate skills shortage in South Africa into a short-term operational plan, focused on a defined set of skills priorities. JIPSA's focus on the limited number of priority skills is viewed as key to the objectives of ASGISA and wider economic growth.

[2] It is by no means implied that the need for affirmative action skills development has gone unacknowledged. It is recognised that government is currently placing skills development high on their agenda. In fact, government's commitment to promoting skills development is well demonstrated. Legislation has been promulgated including the South African Qualifications Authority Act No 58, 1995, the Skills Development Act No 97, 1998 and the Skills Development Levies Act No 9, 1999. 25 Sector Education and Training Authorities (SETAs) have been introduced which are responsible for overseeing the training and skills development in specific national economic sectors. The South African Qualification Authority (SAQA) and Education and Training Quality Assurance (ETQA) were also established as the central 'quality authority' for education and training in South Africa. The National Qualifications Framework (NQF) was devised to provide a unified system for all education and training qualifications in South Africa. Education and training was also re-designed according to the Outcomes-Based Education and Training (OBET). Learnership programmes and structured workplace learning programmes have been introduced as a form of outcome-based education and training with the aim of learners achieving a qualification registered by the South African Qualifications Authority (SAQA) related to the specific occupation. National strategies and initiatives have also been introduced such as the Human Resource Development (HRD) Strategy, the National Skills Development Strategy (NSD), and AsgiSA and JIPSA (Mummenthey, 2008).

achievements have been managed in many respects.[3] However, despite these notable achievements and the strides that have been made towards the redress of the South African society, challenges still remain. Even with the previous and current interventions in place, the effects of Apartheid are still clearly visible. In addition there is strong criticism towards redress measures and whether or not it is effective in bringing about the transformation it was designed to bring. Jimmy Manyi, in his then capacity as the Chairperson of the Commission for Employment Equity, emphasised in the 2009 annual report of the Commission for Employment Equity his impatience with the marginal progress that has been made ten years after the promulgation of the Employment Equity Act (Commission for Employment Equity, 2009). Statistics from the report showed that the national labour market was still very much racialised. It was reported that White South Africans were still predominantly located in middle to high end occupations while Black South Africans remained at the lowest end of the labour market. 'The devastating consequences of South Africa's former racist policies are manifested in virtually every current statistical category regarding Blacks in South Africa' (Twyman, 2001, p. 315). Unemployment is currently standing at 23% (on the narrow definition of the unemployment rate) with South Africa having one of the highest unemployment rates in the world. On the broad definition, which includes 'discouraged work seekers' the unemployment rate is standing at around 37% (STATS SA, 2010). According to 2006 statistics, there is a clear racial underpinning to the unemployment rate. While approximately 30% of Blacks are unemployed, only 20% of Coloureds and 14% of Indians are unemployed. This can be compared to the mere 4% of Whites who are unemployed (Sebusi, 2007). Moreover, the high unemployment rate goes hand-in-hand with a high poverty rate. Seventy five point four percent of South African adults earn an income of equal to or less than R4166.67 per month and 26% of South Africans live below the national poverty line of R515 a month (Bleby, 2010). The severity of unemployment and poverty situation in South Africa is further exemplified by the high rate of dependence on social assistance grants. In 2011 nearly 31% of South Africans, 15 million people, received social assistance grants (Ndlangisa, 2011). Furthermore,

[3] According to the third edition of the Development Indicators publication (Republic of South Africa, 2009) inflation has fallen from a high of over 20% in 1986 to a low 3.7% in January 2011. Gross Domestic Product (GDP) increased from 3.2% in 1994 to 5.4% in 2006. Foreign direct investment increased dramatically between 1994 and 2008. Government debt as a percentage of GDP decreased from 47% 1994 to a low of 22.6% in 2008 and the country has also broadened access to social services.

another consequence of unemployment and poverty manifests in South Africa's extremely high crime rates. South Africa has been found to have the second highest rate of murders in the world. All the above mentioned, unemployment, poverty and the subsequent harsh living conditions, feed into a desperate situation and are often cited as facilitators of the high crime rate (CSVR, 2010).

Furthermore, a measure that can be used to see whether Affirmative Action, as implemented to date, is advancing or promoting the achievement of economic equality is called the GINI index or GINI coefficient. The GINI coefficient measures how materially and economically unequal individuals in a given country are. In a society in which material benefits are distributed equally the index would be zero, in one in which all such benefits are bestowed on one person the GINI index would be 1 (Hoffman, 2007). According to the Primary Health Care Sector Policy Support Programme (2009) the GINI index for South Africa was .679 in 2009 rising from .66 in 2007.[4] The South African Institute of Race Relations gave the nation a score of .65 in 2005, poorer than the .60 in 1996. It found that the top 10% of earners were 33 times better off than the bottom 10%. In contrast, in Japan and Sweden the GINI index is at about .25 and there is only a disparity of six times between the top and bottom 10% (Hoffman, 2007). The income of the richest 20% of South Africans equates to 70.0% of the total income. This is compared to the income of the poorest 20% of South Africans which equates to a mere 4.6% of total income.

[4] Not only are the effects of Apartheid still clearly visible, but as can be seen from the above statistics the GINI index has moved in the wrong direction despite the fact that South Africa is a country committed constitutionally to the promotion of equality and despite the formal affirmative action initiatives described above. A reason for the increasing GINI coefficient is partially explained by Adam Habib, the deputy vice-chancellor of the University of Johannesburg. In his Polokwane briefing published on 26th October 2007 he noted that 'the redress strategy has implicitly assumed an equal playing field within the Black population, which is simply not the case. Inequality among Blacks has been rising for nearly two decades. The net effect is that more well-off sections of the Black population monopolize the benefits of redress initiatives' (Hoffman, 2007, p.1). There has been growing inequality amongst African households that is driving the GINI coefficient. In-line with this, according to Landman, Bhorat, van der Berg and van Aard (2003) there has been a recent shift where the main driver of inequality currently in South Africa is no longer the Black/White divide, but rather the intra-group divide within the Black group. A reason for this phenomenon may be attributed to an unintended consequence of certain imperatives, such as BEE initiatives, geared towards the redistribution of economic, social, cultural and political power. According to Alexander (2006), these imperatives are not benefiting and developing the masses of poor and disadvantaged Black South Africans who most require the assistance. Instead, they are rather only benefiting a small handful of aspirant and influential Blacks.

The income inequality has a clear racial underpinning. The mean per capita income for a White individual is R8 141.15 per month. This is compared to the mean per capita income for a Black individual of R845.83 per month (Republic of South Africa, 2009). This makes it clear that income distributions are deeply unequal.

The Human Development Index has indicated that South Africa has slid from the 94th to 121st position in the world between 2001 and 2006. The exacerbation of these inequalities in our society is evidenced by a tsunami of poverty (Hoffman, 2007). South Africa has overtaken Brazil as the country with the widest gap between rich and poor in the world (Manuel, 2009; Republic of South Africa, 2009). The Commission for Employment Equity (2008) found that Africans constitute the largest group (79.0%) of the national population in South Africa; followed by Whites (9.6%); Coloureds (8.9%) and Indians (2.5%). In 2008, with regards to representation in the South African workplace, Blacks represented 28.8% of all employees at the Top Management level while Whites represented 68.2 percent of all employees at this level. White representation at the Senior Management level is more than five times their representation in the Economically Active Population (EAP). Blacks are three times below their representation in the EAP. Blacks represented 41.3 percent of all employees at the professionally qualified and middle management level while Whites represented 57.2 percent of all employees at this level. According to the annual report of the Commission for Employment Equity for 2007-2008 (Commission for Employment Equity, 2008), very little progress had been made in transforming the upper echelons of organizations in the private sector. Also disconcerting is the fact that recruitment and promotion rates in top management positions also still continues to be much higher for Whites compared to other groups. Seemingly Whites are still being favoured for higher and more sought-after positions now in a time of supposed transformation. When reaching the lower levels comprising unskilled and manual labour, the majority of positions are held by Blacks while only a fraction of these positions are held by Whites (Commission for Employment Equity, 2009).

The conclusion that can be drawn is that the impact of Affirmative Action in promoting equality, as it is required in the Constitution, has signally failed to promote the achievement of equality, now 17 years later (Hoffman, 2007). Additionally, progress towards poverty alleviation is generally measured against the achievements of the United Nations Millennium Development Goals (MDGs). The MDGs, with regards to workforce representation and poverty alleviation, are not being achieved with the current measures in place (Hoffman, 2007). Nevertheless, the Commission for Employment Equity (2008) reported that it has become apparent to the Commission representation during the period under review that there has been some encouraging movement towards achieving the objectives of the Employment Equity Act. However, the pace of change remains frustratingly slow. In particular, the slow pace of change is reflected in the low representation of Black individuals in general, especially in the top and senior management levels. The Commission notes with great concern, the fact that despite the Employment Equity Act having been enacted for almost 10 years, there is a gross under-utilisation of the greater portion of the productive population of South Africa.

It has been questioned as to whether the current programmes in place are bringing about a real difference in an authentic manner. According to Mhkwanazi (as cited in Hoffman, 2007) much misery, looting and plundering, faking and job hopping by those promoted too quickly has unfortunately become evident. The intended beneficiaries of Affirmative Action, sadly, have become its victims (Hoffman, 2007). Hoffman (2007) states at present all too many recipients of the benefits of Affirmative Action are unhappy job-hopping fakers rather than useful members of society. ‘There has also been an exodus from the country of young skilled individuals who see no prospects for themselves amid the BEE looting and plundering’ (Hoffman, 2007, p. 1). In many instances previously disadvantaged individuals are simply put into positions to fill quotas. In these instances a real difference is not made. ‘Affirmative Action, as it is traditionally interpreted in terms of quotas and preferential hiring is a cheap, shallow, insincere cop-out solution that denies the severity of the problem’ (De Goede & Theron, 2010, p. 31). The traditional interpretation is an insincere solution as far as it denies the fundamental cause and severity of the problem and ultimately hurts the people it is meant to help through a gradual systemic implosion

of organizations due to a lack of motivated and competent employees and a loss of institutional memory (Esterhuyse, 2008).

A *real* effort needs to be made to correct the past wrongs and effects thereof and the Human Resource Management and Industrial Psychology profession needs to address this problem with a real sense of urgency (De Goede & Theron, 2010). The Minister of Labour, Membathisis Mdladlana, speaking in September 2007, referred to the skills shortage as a ticking time bomb (Hoffman, 2007) and believes that South Africa is sitting on a ticking time bomb indicating that the country may be on the edge of a social explosion. According to Coetzee (2011) South Africa is indeed sitting on a ticking time bomb which renders South Africa's young democracy vulnerable and threatens its continued existence. Even if there is no advantage or disadvantage in responding to the problem, the adverse impact of selection in South Africa is a problem to which the HR profession needs to find an intellectually honest solution. A real effort must be made, not only because the situation could potentially become volatile, but also because it is the right thing to do. Human Resource Practitioners and Industrial Psychologists must be honest and seriously acknowledge that in the past there was wrongdoing and that ownership must be taken. The effects of the past wrongdoings must be dealt with head on, proactively and effectively. It would be disappointing if new generations of Human Resource practitioners and Industrial Psychologists would simply accept the status quo regarding Human Resource Management practices in their organisations. A more ideal scenario would be one where practitioners critically question the status quo along with a creative and innovative attitude that manifests itself in continued intellectual and practical efforts to improve the success of current Human Resource Management interventions. Human Resource practitioners and Industrial Psychologists cannot afford to simply accept the disproportional distribution of job opportunities across racio-ethnic groups and the high GINI coefficient.

If, as is evidently the case, the previously disadvantaged group continue to lack the education, the training and the skills of those who were not so disadvantaged, there is simply no sustainable basis upon which to promote the achievement of equality. Trying to force the process by pushing square pegs into round holes in

‘empowerment deals’ does not assist in solving the fundamental problem. If the differences in criterion performance between groups can indeed be attributed to differences in the levels of competency potential latent variables required to succeed on the job, it would imply that an intellectually honest solution would be to provide those individuals with the opportunities to develop the still lacking knowledge, skills, abilities and coping strategies. The solution, therefore, lies in implementing aggressive affirmative development aimed at developing the job competency potential latent variables required to succeed in the job through educational opportunities. In order to affect a significant decrease in the GINI coefficient those currently excluded from the formal economy need to be provided with the still lacking knowledge, skills, abilities and coping strategies that will allow them the opportunity to productively participate in the economy.

Education, as the government has pointed out, is a strong and sustainable solution to lift South Africans out of poverty and curb the current imbalances with regards to workforce representativeness. The post-apartheid government's agenda is to address poverty and redress inequality amongst all societies (Khumalo, 2003). The achievement of educational equality remains a key constitutional goal. South Africa’s Millennium Development Goals (MDG’s) have included initiatives to accelerate and improve the quality of, and access to, education. The mid-term country report, (South Africa Millennium Development Goals Mid-Term Country Report, 2007), showed that government has undertaken a number of steps to improve access to primary education as well as initiating a major, national campaign and programme to eradicate illiteracy in the country by 2015. Affirmative development, as is currently implemented, has a focus on education in order to bring about long term change. An education system in which all learners receive quality education is, in the long term, the best way in which to achieve a more egalitarian society in which all have equal worth as human beings.

Nevertheless, the focus also needs to be on the *short* term, the now. According to Hoffman (2007) South Africa’s current challenges can best be dealt with by pro-actively addressing the inadequacies of the education system, including adult education. In the long run the solution lies in rectifying the under-investment in Black schools. In the interim the solution lies in affirmative development programmes

aimed at individuals who have already entered the labour market (South Africa Millennium Development Goals Mid-Term Country Report, 2007; C.C Theron, personal communication, 2 March 2010). Those individuals from the previously disadvantaged group already in the job market that have the potential to learn should be identified and developed. Affirmative development programmes are designed to empower employees with the job competency potential and job competencies required to deliver the outputs for which the job in question exists. The expectation is that the learner would be able to apply the newly derived knowledge to novel stimuli not explicitly covered in the affirmative action development programme. It is proposed that through this approach the current inequalities and ticking time bomb are addressed in a prompt and sincere manner. [5]

A further consideration is the number of people in South Africa who have already left school with inadequate intellectual capital to be competitive in the open labour market, but who potentially could contribute to the economy far beyond their current capability. There lies a vast untapped reservoir of human potential in South Africa. The concern is that for innumerable individuals the tragic reality is that their talent will never be discovered and developed (De Goede & Theron, 2010). The following quote from Stephen Jay Gould (Gould, 2011) captures this well:

> I am somehow less interested in the weight and convolutions of Einstein's brain than in the near certainty that people of equal talent have lived and died in cotton fields and sweatshops.

All individuals will, however, not benefit equally from developmental opportunities. Limited resources should be invested wisely in those that would benefit most from further developmental opportunities.

---

[5] Correct identification of individuals with high learning potential may also be very advantageous for organisations. If individuals from the designated group are also included in the search for learning potential, the pool of individuals is increased, therefore increasing the chances of identifying superior learning potential. This then adds to an organisations competitive advantage as most organisational competitors have equal access to resources like land labour and capital and therefore human resources or human capital is very appealing. Deloitte and Touche reported in June 2007 that 81% of firms struggled to find appropriate staff, with 76% saying that finding appropriate employment equity candidates for vacancies was problematic. The Bureau for Economic Research at Stellenbosch University found that 47% of manufacturers in South Africa cited skills shortages as their most serious difficulty (Hoffman, 2007).

It is, therefore, proposed here that the previously disadvantaged individuals with the potential to benefit from cognitively challenging affirmative development opportunities should be identified by Human Resource Practitioners and Industrial Psychologists in industry and subsequently developed[6].[7] This raises the question where and how the training should be offered? One possibility would be to commit to the appointment of specific individuals before they have actually realised their potential. Individuals with potential are therefore identified and selected directly into a job and developed on-the-job. This is seemingly what the Employment Equity Act (Republic of South Africa, 1998, p. 22) has in mind when it argues that:

> For purposes of this Act, a person may be suitably qualified for a job as a result of any one of, or any combination of that person's-
> (a) formal qualifications;
> (b) prior learning;
> (c) relevant experience; or
> (d) capacity to acquire, within a reasonable time, the ability to do the job.

Another possibility would be not to commit to the appointment of specific individuals before they have actually realised their potential. Rather a two-stage selection procedure is employed. Previously disadvantaged individuals who should maximally benefit from developmental opportunities would be selected during the first stage. As resources are scarce only those previously disadvantaged individuals who would subsequently derive maximum benefit from such development opportunities should be identified and invested in. Individuals with learning potential are therefore identified and selected for affirmative development programmes and developed off-

[6] This argument, however, implies that past social injustices impacted directly on attributes required to perform successfully and not (so much) on psychological processes and structures that play a role in the development of the attributes required to succeed on the job. If past social injustices had the latter, more far reaching impact, rehabilitation of the psychological processes and structures through which critical attributes and competencies develop, would also be required. Moreover the argument implies that the competency potential latent variables relevant to job performance that were negatively affected by the lack of opportunity are sufficiently malleable to respond to development interventions.

[7] The Broad Based Black Economic Empowerment (BBBEE) Codes includes important provisions on employment equity and human resource development (Office of the Presidency, 2008). It was further reported in the Commission for Employment Equity (2008) that a key worrying factor is the disparities in training interventions in terms of race and gender, as well as in terms of the various occupational levels. The CEE would like to see a greater concentration of resources being put into upgrading skills. Therefore despite the efforts initiated by the government, every Human Resource department has a role to play in skill development and the implementation of affirmative development programs.

the-job. During a second phase of selection, those with the highest expected job performance can be selected, based on a battery of predictors that could include an evaluation of the performance on the affirmative development programmes. Given the less-than-perfect predictive validity of any selection procedure, the latter option seems a more cautious option than the alternative of selecting previously disadvantaged individuals directly into shadowing positions. Directly selecting disadvantaged individuals into shadowing positions compounds prediction errors. A two stage approach allows for the prediction errors of the first stage to be formally acknowledged in the second stage of prediction. This latter option is in addition seemingly not altogether ruled out by the Employment Equity Act (Republic of South Africa, 1998, p. 24) when it states that:

> (6) An employment equity plan may contain other measures that are consistent with the ***intentions*** of this Act.

All attempts should be made to ensure that those who are given the opportunity to participate in the affirmative development programs do eventually succeed in the programme and thereafter in their job. However the level of learning performance that those who participate in affirmative development programmes achieve is not a random event. Rather the level of learning performance is an expression of the systematic working of a complex nomological network of person-centred and situational/environmental latent variables. Some of these latent variables are difficult to modify. Through selection, the level of learning performance that those that participate in affirmative development programmes achieve can be manipulated by regulating the flow of those that enter the affirmative development opportunity by filtering out those candidates whose expected learning performance is too low given their profile on the non-malleable learning potential competency latent variables.

The level of learning performance that an individual achieves is, however, not only determined by non-malleable person characteristics but also by malleable person characteristics and malleable situational characteristics. Selection of individuals with high learning potential is not enough to ensure high learning performance. The malleable person characteristics and the malleable situational characteristics also need to be set at levels that will ensure successful learning. Additional interventions are therefore required to manipulate these malleable latent variables to levels

conducive to successful learning (C.C Theron, personal communication, 2 April 2010).

The preceding argument, however, presupposes that the dimensions of learning performance are understood, that the (malleable and non-malleable) person and situational determinants of learning performance are known and that the manner in which the person and situational latent variables combine to affect performance on the various dimensions of learning (or learning competencies) are understood (C.C Theron, personal communication, 2 April 2010). In order to differentiate between candidates in terms of their training or development prospects and to optimise training conditions, it is imperative to determine why differences in learning performance exist. A performance@learning competency model (Saville & Holdsworth, 2000, 2001) thus needs to be developed as an informed performance hypothesis that identifies the critical learning competency potential latent variables, learning competencies and learning outcomes as well as the manner in which they combine to affect learning performance.

A basic performance@learning competency model has been developed by De Goede (2007), based on the work of Taylor (1989, 1992, 1994). Taylor (1989, 1992, 1994) did a considerable amount of theorizing on the learning potential construct and developed the Ability, Processing of Information and Learning Battery (APIL-B) which is a learning potential measure specifically. 'The Ability, Processing of Information and Learning Battery (APIL-B) is a set of tests designed to assess an individual's core or fundamental capabilities and potentialities. It does not measure specific skills, which are strongly affected by past opportunities' (Taylor, 1997 p. 1). The APIL-B test battery assesses an individual's learning potential by reducing the influence of verbal abilities, cultural meanings and education qualifications (Taylor, 1997). The De Geode (2007) learning potential structural model was the product of an investigation into the internal structure of the learning potential construct as measure by the APIL-B Test Battery developed by Taylor (1989, 1992, 1994, 1997).

Taylor (1989, 1992, 1994, 1997) argued that learning in essence comprises two learning competencies, namely transfer and automatization. Two cognitive learning competency potential latent variables (fluid intelligence and information processing

capacity) in turn determine the level of competence that learners achieve on these two learning competencies

De Goede (2007) found close fit ($p > .05$) for his proposed model. De Goede's (2007) study showed through the analysis of the standardised residuals for the structural model that the addition of one or more paths would probably improve the fit of the model. Modification indices could however not point out any specific additions to the existing model. Logic dictates that learning performance will highly unlikely be determined by cognitive latent variables only. Non-cognitive determinants of learning performance would, however, probably not affect transfer and automatization directly. The question therefore arises which other learning competencies need to be taken into account to develop a more comprehensive learning performance structural model.

The level of learning performance that learners achieve in a development programme is complexly determined by a nomological network of latent variables characterizing the learners, and their perception of the learning and work environment. Attempts to ensure that individuals admitted into empowering development opportunities optimally benefit from such learning opportunities, will succeed to the extent that this complexity is accurately understood. A critical question, therefore, is in which ways the structural network of influences underlying learning performance should be considered to be complex. Learning performance is complexly determined in that a large number of latent variables combine to determine the level of learning performance that any specific learner achieves. Learning performance is also complexly determined in that there are a large number of latent variables which are richly interconnected. Learning performance is further complexly determined in that feedback loops allow latent learning outcome variables to affect the learning competency potential latent variables and through them, the learning competencies that originally (directly and indirectly) determined the outcome latent variables, so as to create a dynamic system. Learning performance is further complexly determined in that the understanding or explanation of learning performance will not be found in any isolated relationship but rather needs to be sought in the integrated network of relationships that exist between the learning competency potential variables, the learning competencies, the learning context

latent variables and the learning outcome variables. The foregoing argument implies that a realistic learning performance structural model should contain few, if any, exogenous latent variables (Diamantopoulos & Siguaw, 2000). A learning performance structural model will more likely fit well, display significant path coefficients, and return large squared multiple correlations for endogenous latent variables if it reflects these design principles.

It is therefore highly unlikely that a single explanatory research study will result in an accurate understanding of the comprehensive nomological network of latent variables that determine learning performance. It becomes more likely that meaningful progress will be made towards a more expansive and more penetrating understanding of the psychological dynamics underlying learning performance if explicit attempts are made to formally model the structural relations governing learning performance and if successive research studies will attempt to expand and elaborate the latest version of the currently existing performance@learning structural model.

The foregoing argument points to the necessity for further research on the De Goede (2007) model. It is argued in the study that the De Goede learning potential structural model should be expanded by expanding the number of learning competencies that constitute learning and by adding non-cognitive determinants of learning performance. The current model focuses exclusively on cognitive ability as a determinant of learning performance. It seems extremely unlikely though that cognitive ability would be the sole determinant of learning performance. In addition, it also seems extremely unlikely that the learning behaviour domain only comprises the two learning competencies (transfer of knowledge and automatization) proposed by Taylor (1994). If non-cognitive determinants are to affect learning performance they most likely do so through other learning competencies than transfer and automatization (De Goede & Theron, 2010).

The argument, therefore, put forward here, is that it is important to fully understand learning potential as it has a role to play in addressing the negative effects of the past in South Africa. Attempts at accelerated affirmative development will be effective to the extent to which there exists a comprehensive understanding of the

factors underlying training performance success and the manner in which they combine to determine learning performance (De Goede & Theron, 2010). In order to fully understand learning potential and the underlying nomological network of push and pull forces further research is needed in this domain. The primary objective of this study, consequently, is to expand on De Goede's (2007) learning potential structural model, to empirically evaluate the fit of the model and, if acceptable, model fit is achieved, to evaluate the significance of the path coefficient estimates.

1.2 OBJECTIVES

The primary objectives of this research were to elaborate the de Goede learning potential structural model by (a) explicating additional competencies that also constitute learning other than transfer of knowledge and automatization, (b) explicating additional learning competency potential latent variables, other than fluid intelligence and information processing ability that additionally determine the level of competence on the learning competencies, (c) developing a theoretical structural model that explicates the nature of the causal relationships that exist between the learning competency potential latent variables, between the learning competencies and between the learning competency potential latent variables and the learning competencies, (d) empirically testing the proposed structural model by first testing the separate measurement models and thereafter the structural model (e) testing the model's absolute fit, (f) evaluating the significance of the hypothesised paths in the model, (g) modifying the structural model if necessary and (h) to compare the fit of the revised structural model to that of the original model.

It was expected that the learning potential structural model would fit the data in this study well, although it was expected that the null hypothesis of exact fit would be rejected. It was furthermore expected that all paths hypothesized in the model would be significant. It was also expected that the measures of learning potential will each explain unique variance in a composite measure of learning performance.

CHAPTER 2
LITERATURE STUDY

2.1 INTRODUCTION

In this section of the thesis the De Goede (2007) learning potential structural model will be briefly explained and thereafter expanded upon. Each added construct will be defined and discussed one by one as to slowly uncover the logic underlying the structure of the proposed learning potential structural model. More specifically, the reasoning behind each added construct, as well as how each added construct fits into the nomological model, will be explained. Before the above-mentioned is put forward, in keeping with the logic set out in the previous section, this section will start by arguing briefly again as to why attention should be drawn to the need to identify individuals from the previously disadvantaged group who possess the potential to learn.

Valid, fair (in the Cleary sense of the term) strict-top-down selection tends to lead to adverse impact against members of the previously disadvantaged group in South Africa. The critical question to consider is why selection procedures create adverse impact. As argued earlier on, the fundamental cause of Black under-representation in higher level jobs is not due to flaws in selection procedures and/or selection instruments. The under-representation is due to the legacy of the previous political dispensation. The root problem is that South Africa's intellectual capital is not, and has not, been uniformly developed and distributed across races. In the South African context, it does not seem unreasonable to attribute the systematic differences in criterion distributions to socio-political conditions that inhibited the development and acquisition of the skills, knowledge and abilities of the previously disadvantaged group required to succeed in the workplace. During the Apartheid era, and even now in the new democratic South Africa, the not previously disadvantaged group had, and still have, easier and more access to opportunities which has allowed them to develop the competencies and competency potential (Saville & Holdsworth, 2000, 2001) required to succeed in the workplace.

If, as is evidently the case, the previously disadvantaged group continue to lack the education, training and skills of those who were not so disadvantaged, there is simply no sustainable basis upon which to promote the achievement of equality. If the differences in criterion performance between groups can indeed be attributed to differences in the levels of competency potential latent variables required to succeed on the job, it would imply that an intellectually honest solution is needed to provide those individuals with the opportunities to develop the still lacking knowledge, skills, abilities and coping strategies. The solution, therefore, lies in implementing aggressive affirmative development, aimed at developing the job competency potential latent variables required to succeed in the job, through educational opportunities.

Resources are scarce, therefore, only those previously disadvantaged individuals, who would subsequently benefit the most from such development opportunities, should be identified and invested in. A need, therefore, exists in South Africa for a method to identify individuals who will gain maximum benefit from affirmative developmental opportunities, especially cognitively demanding development opportunities.

In order to differentiate between candidates in terms of their training or development prospects and to optimise training conditions, it is imperative to determine why differences in learning performance exist (De Goede & Theron, 2010). Differences in learning performance described in terms of learning outcomes can be explained in terms of learning competencies. Moreover, learning competencies can be explained in terms of learner characteristics. In order to identify candidates with the potential to learn, in terms of a construct orientated approach to selection, a valid performance hypothesis on the person-centred drivers of the learning competencies is required.

To this end a performance@learning competency model has been developed by De Goede (2007), based on the work of Taylor's APIL-B test battery, a learning potential measure (1989, 1992, 1994).

The current model focuses exclusively on cognitive ability as a determinant of learning performance. It seems extremely unlikely though that cognitive ability would be the sole determinant of learning performance. In addition, it also seems extremely unlikely that the learning behaviour domain only comprises the two learning competencies (transfer and automatization) proposed by Taylor (1994). If non-cognitive determinants are to affect learning performance, they most likely do so through other learning competencies than transfer of knowledge and automatization (De Goede & Theron, 2010). A need consequently exists to modify the learning potential structural model proposed by De Goede (2007) and to elaborate the model by expanding the number of learning competencies that constitute learning as well as adding non-cognitive determinants of learning performance.

2.2 THE DE GOEDE (2007) LEARNING POTENTIAL STRUCTURAL MODEL

In order to find answers as to which competencies contribute towards differences in learning outcomes, De Goede (2007) based on the work of Taylor (1989, 1992, 1994, 1997), came up with five latent variables. These five latent variables that make up the De Goede (2007) learning potential structural model are discussed and defined in this section.

2.2.1 Information Processing Capacity

Taylor (1994), in agreement with Ackerman (1988), believes that information processing capacity makes up one of the constituent parts of cognitive ability. The term comes from when man came to be seen primarily as an information processor. Jensen (1998, p. 205) describes information processes as ‘essentially hypothetical constructs used by cognitive theorists to describe how persons apprehend, discriminate, select, and attend to certain aspects of the vast welter of stimuli that impinge on the sensorium to form internal representations that can be mentally manipulated, transformed, stored in memory (short-term or long-term), and later retrieved from storage to govern the persons decisions and behaviour in a particular situation.’ Information processing is a key term in cognitive psychology used to denote what happens mentally between stimulus and response including perception, memory, thinking, problem-solving and decision-making. Information is usually taken

to be any stimulus with a mental content. Information processing is genetically endowed which implies that an individual's capacity to process information is fairly free from the influence of education and opportunities (Taylor, 1994).

In the learning context the learner is often faced with novel, intellectually challenging tasks. Such tasks cause the individual to experience uncertainty which s/he naturally tries to reduce. In order to reduce the uncertainty the individual has to firstly use executive processes (Sternberg, 1984) to process the bits of information or stimuli provided in the tasks and select the strategy to follow. Secondly, the individual has to use non-executive processes (Sternberg, 1984) to actually carry out the strategy. The processing of bits of information through cognitive processes (executive and non-cognitive), which are activated in an uncertain situation in order to reduce the amount of uncertainty, could be termed information processing.

Individuals with high information processing capacity can more quickly, accurately and flexibly process information and are able to acquire more information, learn faster and perform better. Regardless of the theoretical perspective, it is clear that individual differences in information processing capacity relate to individual differences in learning or, more precisely, the speed of learning (Jensen, 1998). The constitutive definition, as taken from the above, is then that information processing is the ability to quickly process informational stimuli accurately with information of a moderate difficulty level as well as maintain cognitive flexibility in order to select and implement an appropriate problem solving approach.

2.2.2 Abstract Thinking Capacity

Taylor (1997) postulates that in work activities requiring additional effort above simple routine duties, conceptual thinking plays an important part. Cattell (1971) and Taylor (1994) share the opinion that the capacity to think abstractly develops as fluid intelligence and consists of a set of general cognitive tools and strategies for application to novel problems. Fluid intelligence can also be thought of as abstract thinking capacity and it is best measured by confronting the test taker with novel

stimuli and asking him or her to find underlying concepts. De Goede (2007) stated that an individual's abstract reasoning capacity plays an important role in dealing with novel kinds of problems and learning. Therefore, an individual's level of fluid intelligence or abstract reasoning capacity would either contribute or inhibit his or her capacity to make sense of the learning task. This type of ability is considered basically innate or unlearned and therefore less susceptible to extensive acculturation, education and the effects of environmental deprivation (Taylor 1994).

This construct can then be defined as reasoning abilities consisting of strategies, heuristics, and automized systems that must be used in dealing with 'novel' problems, educing relations, and solving inductive, deductive, and conjunctive reasoning tasks.

2.2.3 Transfer of Knowledge

A pillar of academic learning is the transfer of existing knowledge and skills on to novel learning material in an attempt to create meaningful structure in the learning material. Many theorists consider transfer as the most basic learning competency (Taylor, 1994). Transfer in training refers to the adaptation of existing crystallised knowledge to create meaningful structure in novel learning material (Taylor, 1994).

Taylor (1994) provided the example of an individual learning to programme a computer in his/her twenties or thirties or later life in order to clarify the concept of transfer. The ability to do so may develop through transfer from verbal, numerical and reasoning skills, which in turn may have developed from fluid intelligence. An individual's fluid ability is responsible for the development of the first specific abilities. After the first crystallized abilities are developed, these specific abilities assist, through a process of transfer of skill, in the emergence of yet more specific skills. Crystallized abilities develop with repeated practice in a particular domain, which was initially unfamiliar to the individual. In other words, crystallized ability is specialised insights and knowledge that result from the use of fluid ability, via transfer of knowledge. Transfer of knowledge, in this context, is described as the process through which crystallized abilities develop from the confrontation between fluid intelligence (Cattell, 1971) and novel stimuli (Taylor, 1994). Stated differently,

transfer of knowledge is the adaptation of knowledge and skill to address problems somewhat different from those already encountered. Transfer of knowledge allows for an already learned task to make it easier and achievable to learn a new task or solve an intellectually more challenging subsequent novel problem. A large part of academic learning is, therefore, the transfer of existing knowledge and skills on to novel learning material in an attempt to create meaningful structure in the learning material.

The essence of transfer of knowledge is perpetual concomitant change, and in the simplest case implies change in performance on one task with change resulting from practice on another. In order for transfer of knowledge and not repetition to occur, the prior task must be *different* in some respect from the subsequent task and usually becomes more complex than those that have come before (Taylor, 1992). Transfer of knowledge is then constitutively defined as the adaptation of knowledge and skill to address problems somewhat different from those already encountered.

2.2.4 Automatization

Automatization, in contrast to transfer, does not have to do with tasks that are different but rather tasks that do *not* change dramatically over time. Automatization involves the individual becoming more efficient and effective at what s/he is doing (Taylor, 1992). Learning tasks are not concluded once sense has been made out of novel stimuli. Unless an efficient algorithm can be written (Taylor, 1994) and stored for later retrieval that captures the problem solving derived through transfer, the stimulus will remain a novel problem to be solved via transfer every time it is encountered. The only way an individual can become more efficient and effective in the execution of a task is if the individual automates many of the operations involved in performing the task (De Goede, 2007). Sternberg (1984) states in-line with the previously mentioned that it is the automization of a substantial proportion of the operations required to perform complex tasks that allow an individual to perform the task with minimal mental effort.

According to De Goede (2007), Ferguson's (1954) theory states that when a individual is faced with a novel learning task, s/he will first attempt to find a way of coping with the problem by 'scanning' his or her already existing knowledge, skills and abilities. If a way of coping with a similar problem has been automated before that present moment, the individual will use a learned response to deal with the novel problem in a similar manner. Although, if no directly applicable skills, knowledge or abilities exist, the individual will make use of fluid intelligence or abstract reasoning capacity to deal with the task by transferring existing relevant, but not directly applicable skills, knowledge and abilities to a solution of a novel problem. Once the task is mastered the individual can add the task that has been learned to his or her already existing pool of skills, knowledge and abilities, therefore elaborating it. Once an individual is then again faced with a novel task he or she can then apply the learned knowledge from a more elaborate pool of skills, knowledge and abilities (De Goede, 2007).

Automatization in other words then refers to an individual pre-consciously making something learned a part of him or herself (De Goede & Theron, 2010).

2.2.5 Job Competency Potential

In the De Goede (2007) learning potential structural model job competency potential refers to the malleable and non-malleable person characteristics that directly and/or indirectly determine the level of competence that job incumbents achieve on the job competencies. The aim of affirmative development is to raise the level of the malleable job competency potential latent variables that determine job performance. The level of the malleable job competency potential latent variables that learners achieve is interpreted as *Learning Performance*.

2.2.6 The Basic De Goede (2007) Learning Potential Structural Model

The level of the malleable competency potential latent variables that learners achieve is hypothesised to be determined by the level of competence on the learning

competencies. Specifically De Goede (2007) hypothesises that the level of competence achieved on *Transfer of Knowledge* is determined by *Abstract Thinking Capacity*. The level of competence achieved on *Automatization* in turn is hypothesised to be determined by *Information Processing Capacity* (De Goede, 2007; Taylor, 1994). *Information Processing Capacity* is in addition hypothesised to affect *Transfer of Knowledge*. The De Goede (2007) learning potential structural model is depicted in Figure 2.1.

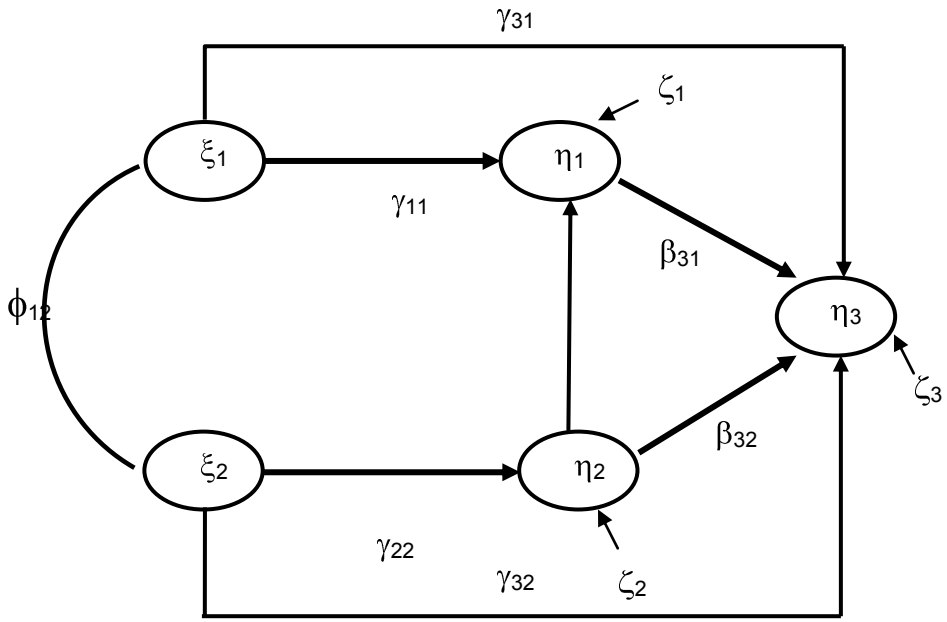

Where:

ξ**1** = *Abstract thinking capacity*

ξ**2** = *Information processing capacity*

η**1** = *Transfer of knowledge*

η**2** = *Automatization*

η**3** = *Job Competency Potential*

***Figure 2.1*. Graphical portrayal of the De Goede (2007) learning potential structural model.** Adapted from "An investigation into the learning structure of the learning potential construct as measured by the APIL test battery." by J de Goede, 2007, unpublished master's thesis. Copyright 2007 by the University of Stellenbosch, Stellenbosch.

2.3 EMPIRICAL EVALUATION OF THE DE GOEDE (2007) LEARNING POTENTIAL STRUCTURAL MODEL

The De Goede (2007) learning potential structural model obtained reasonable model fit as judged by the overall goodness-of-fit measures. The close fit null hypothesis was not rejected ($p > .05$). The results of the statistical analysis of the De Goede (2007) learning potential structural model showed the relationship between information processing capacity and automatization to be significant ($p < .05$). The direct paths that were hypothesised between *Information Processing Capacity* and *Learning Performance* and between *Automatization* and *Transfer of Knowledge* were also supported. Support was also found for the indirect effect of *Information Processing Capacity* on *Learning Performance* mediated by *Automatization*.

The study, however, was unable to corroborate a number of the central hypotheses in Taylor's (1997, 1994, 1992, 1989) stance on learning potential. Unfortunately, the hypothesis that *Abstract Thinking Capacity* affects *Transfer of Knowledge* was not supported as well as the hypothesis that *Transfer of Knowledge* affects *Job Competency Potential*. The results also showed that *Automatization* did not significantly affect *Job Competency Potential* targeted by the training intervention ($p > .05$) and the affect of *Abstract Thinking Capacity* on the job competencies targeted by the training intervention was found to not be moderated by *Transfer of Knowledge*. Moreover the affect of *Information Processing Capacity* on the job competencies targeted by the training intervention was found to not be moderated by *Automatization*. The question then naturally arises as to whether these findings are due to a conceptual flaw in Taylor's (1989, 1992, 1994, 1997) original theorizing or whether it is due to the inability of the study to successfully operationalize the job competency potential latent variable. However the objective of this research is *not* to reflect on shortcomings of the De Goede (2007) learning potential structural model. Rather the objective is to explain additional variance in learning performance as the De Goede (2007) learning potential structural model does not capture the full complexity of the psychological dynamics underlying learning performance. The array of learning competencies that constitute learning needs to be expanded beyond the two competencies identified by Taylor (1989, 1992, 1994, 1997). The

failure of the current model to acknowledge that learning performance is not solely determined by cognitive learning competency potential latent variables needs to be amended. The De Goede (2007) learning potential structural model will therefore be expanded on through the addition of additional learning competencies as well as non-cognitive learning competency potential latent variables.

2.4 THE PROPOSED EXPANDED LEARNING POTENTIAL STRUCTURAL MODEL

Personnel selection is aimed at regulating the flow of individuals into the organization or into an intervention within the organisation. Selection typically involves a situation where the number of applicants exceeds the number of available job, or training and developmental vacancies. The objective of selection is therefore to optimize employee work or training performance by appropriately assigning applicants to either accept or a reject treatment (Cronbach & Gleser, 1965). Given this objective, the focus in personnel selection is the criterion construct (η). The ultimate criterion, job or training performance/success, always remains the focus in selection decision-making (Ghiselli, Campbell & Zedeck, 1981). The final criterion in the case of an educational or training and development selection procedure is learning performance. Learning success should thus be conceptualised in terms of that which constitutes successful learning in a training and development or educational programme. In the development of a learning performance structural model that will explain variance in learning performance, that will form the theoretical foundation for a generally applicable learning potential selection battery and that will inform HR interventions aimed at ensuring that effective learning takes place, a generic conceptualisation of the ultimate criterion is required. A comprehensive understanding of the learning competencies and learning outcomes that constitute successful learning performance is therefore required. The question arises as to what the learning competencies are that allows one individual to be more successful than another in acquiring novel intellectually demanding skills or job competencies.

Individuals are assigned to affirmative development treatments with the aim of achieving specific learning objectives through specific learning outcomes. These

learning objectives are to exceed the minimum critical job competency potential (most likely, attainment) required to display the job competencies on a quality level sufficient to achieve the outcomes for which the job exists. Specific learning competencies are instrumental in attaining these desired learning outcomes. These learning behaviours, in turn, depend on and are expressions of a complex nomological network of person-centred characteristics, learning competency potential, some of which are relatively malleable (attainments) and some of which are less easily altered (dispositions). A performance@learning competency model can therefore be assumed, analogous to the performance@work model originally proposed by Saville and Holdsworth (2001). Hence, it is argued that the performance@learning model should be sequentially linked to the performance@work competency model. This will provide a model to explore the structural relationship between the characteristics of the learner required to exhibit the learning behaviours needed to develop the qualities necessary to exhibit the work behaviours that are instrumental in achieving the outcomes for which the job in question has been created (De Goede & Theron, 2010).

As previously mentioned, the De Goede (2007) learning potential structural model will, in what follows, be expanded upon. The expanded model will include non-cognitive factors which makes sense as the influences of non-intellectual factors that contribute to learning are easily recognized.[8]

The original causal paths hypothesised by De Goede (De Goede, 2007; De Goede & Theron, 2010) are retained in the hypothesised expanded learning potential structural model, as can be seen in Figure 2.2 (p. 81). While the individual engages with the learning material his or her *Information Processing Capacity* directly positively influences his or her *Automatization* and indirectly through *Automatization* affects *Transfer of Knowledge*. Additionally, as was originally hypothesised in the De Goede model (Figure 2.1), the current model further proposes that *Abstract Reasoning Ability* also positively influences *Transfer of Knowledge*.

---

[8] A wide variety of trainee characteristics thought to affect transfer have been suggested in the practitioner literature (e.g., Robinson, 1984; Trost, 1982); however, empirical investigations of ability, personality and motivational effects on training and transfer outcomes are quite limited.

Hypothesis 1: In the proposed learning potential structural model it is hypothesised that *Information Processing Capacity* positively influences *Automatization,* that *Automatization* mediates the impact of *Information Processing Capacity* on *Transfer of Knowledge* and that *Abstract Reasoning Ability* positively influences *Transfer of Knowledge*.

2.4.1 Additional Learning Competencies and Learning Competency Potential Proposed for Inclusion in the Expanded Learning Potential Structural Model

The objective of the learning potential structural model is to explain variance in learning performance. Learning performance according to the De Goede (2007) model comprises two learning competencies *Transfer of Knowledge* and *Automatization*. Theorising aimed at explaining variance in learning performance is guided by the identity of the competencies that comprise the construct. De Goede (2007) presented Taylor's (1989, 1992, 1994, 1997) compelling argument that cognitive ability is a determinant of learning performance which is based on the two learning competencies *Transfer of Knowledge* and *Automatization.* However, it seems extremely unlikely though that cognitive ability would be the sole determinant of learning performance. Individuals probably have to invest numerous intellectual *and* non-intellectual resources to succeed in learning. Subjective introspective analysis of one's own success or failure at learning points to a number of non-intellectual factors that contribute to learning. We can all recount moments when self-doubt, lack of motivation, time or effort overwhelmed intellectual potential. These resources probably simultaneously and interdependently contribute to learning. If non-cognitive determinants like those harvested from subjective introspective insight are to affect learning performance, they most likely do so through other learning competencies than *Transfer of Knowledge* and *Automatization* (De Goede & Theron, 2010).

The fundamental research initiating question directing theorising is therefore why variance in learning performance occurs? Given the arguments presented by Taylor

(1989, 1992, 1994, 1997) as captured by De Goede (2007) in his learning potential structural model (Figure 2.1), this firstly translates to the question as to which additional learning competencies other than *Transfer of Knowledge* and *Automatization* constitute learning. The research initiating question then subsequently translates to the question which learning competency potential latent variables, other than *Abstract Thinking Ability* and *Information Processing Capacity*, induce variance in the identified learning competencies.

2.4.1.1 Time Cognitively Engaged

In an ideal learning scenario learners would be highly engaged in the particular training material, as higher levels of learner's engagement are generally associated with higher levels of learning. 'Student engagement' is generally considered to be among the better predictors of learning and is often positively related to college-reported grade point average, GPA scores, as well as personal development. The premise is deceptively simple, perhaps self-evident, as the more students study or practice a subject, the more they tend to learn about it (Carini, Kuh & Klein, 2004).

Additionally, this variable is specifically important as individuals from the previously disadvantaged group may, due to their lower levels of crystallised abilities, be required to exert more effort and spend more time cognitively engaged in their study material. In-line with this reasoning the results of Carini, Kuh and Klein's (2004) study suggest that low ability students benefited more from engagement than their high ability counterparts. In contrast, individuals with higher levels of crystallised intelligence may simply require less effort to achieve similar academic results. It appears that high ability students need to expend less effort in learning activities to do well academically. More specifically it was found that low ability students had a .17 correlation between total time spent preparing/studying for class and their RAND score[9] while the correlation for high ability students was found to be .01 (Carini, Kuh & Klein, 2004).

[9] RAND tests tap general intellectual ability to a large degree. The measures developed by RAND consist of a series of newly developed cognitive and performance tests. The RAND tests consist of various combinations of six different 90-minute critical thinking and performance problems (Carini, Kuh & Klein, 2004).

Engaged learners, as Reeve, Jang, Carrell, Jeon and Barch (2004) suggest, are characteristically focused, directed, goal oriented and relentless during their interaction with social and environmental learning conditions. According to Darabi, Nelson and Paas (2007) motivation literature lists attributes of involvement or engagement as (1) sustained, effortful and enthusiastic participation, (2) positive attitude, (3) intense effort, (4) focused attention and (5) goal directedness (Reeve et al., 2004; Skinner & Belmont, 1993). Individuals who are engaged show sustained involvement in learning activities; they initiate action when given the opportunity and exert intense effort and concentration in the implementation of learning tasks. Reed and Schallert (1993) also report that involved learners describe their learning experience as focused concentration, attention and deep comprehension. Further, Skinner and Belmont (1993) describe learners' engagement as the 'intensity and emotional quality of children's involvement in initiating and carrying out learning activities' (p. 572).

More recently, however, at least two distinct definitions have appeared in the literature. In the first, student engagement has been used to depict students' willingness to participate in routine learning activities, such as attending classes. The second definition focuses on more subtle cognitive, behavioural and affective indicators of student engagement in specific learning tasks. This second orientation is reflected well in the definition offered by Skinner and Belmont (1993):

> Engagement in learning refers to the intensity and emotional quality of an individual's involvement in initiating and carrying out learning activities. Individuals who are engaged show sustained behavioural involvement in learning activities. They select tasks at the border of their competencies, initiate action when given the opportunity, and exert intense effort and concentration in the implementation of learning tasks; they show generally positive emotions during ongoing action, including enthusiasm, optimism, curiosity, and interest (p. 572).

This definition implies the use of three interrelated criteria to assess student engagement levels:

- *Cognitive criteria*; the extent to which students are attending to and expending mental effort in the learning tasks encountered,
- *Behavioural criteria*; the extent to which students are making active responses to the learning tasks presented, and
- *Affective criteria*; the level of students' investment in, and their emotional reactions to, the learning tasks.

Due to the nature of this study the *cognitive criteria* will be studied as cognitive engagement is deemed the most relevant to the study and is therefore the only criteria of 'student engagement' focused on and included in the constitutive definition of *Time Cognitively Engaged*. Future research could perhaps include both behavioural and/or affective criteria in an expanded version of the proposed learning potential structural model.

Corno and Mandinach (1983) first coined the term 'Cognitive Engagement' in research that examined classroom learning. Since then cognitive engagement has been utilized in fields varying fields. The cognitive dimension of engagement concerns student psychological involvement in learning, for example, engaging in effortful learning and task-oriented goals. Richardson and Newby (2006) defined cognitive engagement as the integration and utilization of students' motivations and strategies in the course of their learning.

With regards to the boundaries of the *Time Cognitively Engaged* construct, included in the learning potential structural model, the literature indicates that early studies often made use of time-based indices like time-on-task in assessing student engagement rates (e.g., Brophy, 1983). Time-on-learning-task has long been recognised as an important contributor to academic success because learning is partly a function of time spent engaged in a task and has been found to have direct implications for learning (Gest & Gest, 2005). In other words, individual differences in the time spent engaged on a learning task will contribute to individual differences in academic skills (Bloom, 1974). In the operationalization of *Time Cognitively*

Engaged, a time component has been included so as to measure not only the 'quality' aspect of cognitive engagement but also the 'quantity' aspect of the variable. With regards to the 'quality' area of *Time Cognitively Engaged*, items relating to the cognitive aspects of engagement often ask students to report on factors such as mental effort they expend on these tasks. The importance of students' effort in confronting academic challenges is commonly accepted. Teachers consider lack of effort to be a major source of low achievement. Acknowledging this line of reasoning, *Time Cognitively Engaged*, as defined here, involves the time spent in which an individual directs his or her energy towards the learning task in an attempt to form structure and ultimately to transfer existing knowledge to the current task. More specifically it is vital that the learner is intellectually in-gear and remains in-gear for some time. The effort the learner exerts, as well as for how long that individual exerts that effort, is therefore vital in its combination. Both these aspects are therefore encapsulated in the *Time Cognitively Engaged* construct included in the proposed leaning potential structural model. More specifically, *Time Cognitively Engaged* was defined in this study as the extent to which individuals were spending time attending to and expending mental effort in their learning tasks encountered.

In support for hypothesis 2 and as learning performance was the criterion in this study; cognitive engagement, has been recognised to play an important role in students' academic performance. Zhu, Chen, Ennis, Sun, Hopple, Bonello, Bae and Kim (2009) conducted research in a physical education environment and found that student cognitive engagement contributed significantly to achievement indicated by knowledge gain. Metallidou and Vlachou (2007) conducted research in a primary school on levels on maths and language achievement and found cognitive engagement to be related in the two subject areas. According to Chamorro-Premuzic, Furnham and Ackerman (2006) a series of multiple-hierarchical regression analyses showed that the Typical Intellectual Engagement (TIE) scale which measures levels of intellectual investment provided significant incremental validity over psychometric general intelligence and the Big Five personality factors in predicting academic performance. When academic performance was assessed through essay marks or final-year dissertation grades, TIE alone appeared to predict

academic performance better than personality and cognitive ability.[10] The results showed TIE correlated highly with all exam results (.43 < *r* > .41) and showed incremental variance of between 13% and 16% over the Big Five in predicting the two totalled scores.

Transfer of Knowledge, as previously defined, refers to the adaptation of knowledge and skill to address novel, cognitively demanding problems different from those already encountered. In order for *Transfer of Knowledge* to occur, the individual must attempt to create meaningful structure of the learning problem by adapting existing knowledge and through applying continuous 'intellectual pressure' on the problem. The learning problem needs to be kept 'alive' in the mind of the learner. The foregoing argument suggests that individuals who exert more effort and persist longer at tasks are more likely to learn more and achieve higher levels of academic achievement (Pintrich & Schunk, 2002) as they are more likely to transfer their knowledge in order to ultimately learn.

In the proposed learning potential structural model it is hypothesised that *Time Cognitively Engaged* positively affects *Job Competency Potential* although its effect is mediated by *Transfer of Knowledge.* The assumption is that individual differences in the time spent engaged on the learning task should contribute to individual differences in skills and abilities required (Bloom, 1974).

It is therefore proposed that *Time Cognitively Engaged* positively influences *Transfer of Knowledge*.

Hypothesis 2: In the proposed learning potential structural model it is hypothesised that *Time Cognitively Engaged* positively influences *Transfer of Knowledge*.

[10] When examination grades were taken as the criterion, personality and cognitive ability account for 15% of the variance combined and TIE explained an additional unique 9% of the variance in academic performance (Chamorro-Premuzicet et al., 2006).

It should be noted that through the addition of this construct the assumption is made that learning tasks are resource sensitive. If level of effort is conceptualized as the amount of attentional resources devoted to the task, increases in effort would be expected to yield increases in performance when tasks are resource dependent. In contrast, when tasks are resource-independent, as might occur when the task is well-learned, changes in attentional effort are predicted to yield only minor changes in task performance. It is therefore presumed that, on the whole, the academic tasks are resource dependant and that *Time Cognitively Engaged* would lead to significant differences in *Learning Performance*. More specifically, at the start of academic skill acquisition, greater demands are placed on the amount of time the individual needs to be cognitively engaged. However, as a learner acquires skills, through automatization, the demands on the amount of time the learner needs to be cognitively engaged is markedly reduced. At a complete level of skill acquisition or complete automatization, the task can be performed with few, if any, attentional resources and can be characterized as *automatic* and performance becomes resource- independent or insensitive.

2.4.1.2 Conscientiousness

Interest in personality traits in the training literature has increased in Industrial/Organizational psychology in recent years (e.g., Colquitt, LePine, & Noe, 2000; Noe, 1986; Tannenbaum & Yukl, 1992). There is a growing body of evidence that supports the importance of measures of personality traits in the prediction of academic and work-related achievement (Barrick, Mount & Judge, 2001; Salgado, 2003; Van der Walt, Meiring, Rothmann & Barrick, 2002).

Personality refers to the relatively stable characteristics of individuals that influence their cognition and behaviour. Personality variables hold importance to researchers and practitioners who seek to understand individual's suitability for a role or work-related activities, as well as their propensity to respond in certain ways in different settings or environments. Personality measures are different to cognitive ability measures and provide information about the important parts of the criterion space of work performance.

In recent years, a consensus appears to be developing among trait personality theorists in support of the Big Five model. The Big Five model of personality or the five-factor model (FFM) (e.g., Mount & Barrick, 1995) has gained tremendous popularity and academic credibility in recent years. The Big Five model has become the dominant trait theory of personality guiding research today. While the model has been subject to a certain amount of criticism, the weight of evidence suggests that the five-factor structure remains remarkably stable over time (Costa & McCrae, 1992), generalizes across cultures and languages (Salgado, 1997) and shows substantial agreement across self and other rating sources (McCrae & Costa, 1990). This growing body of validating evidence further solidifies the Big Five model's status as the most widely accepted and influential modern trait theory of personality. While a variety of terms have been used to represent the five factors, the terms Extraversion, Agreeableness, Conscientiousness, Neuroticism (or Emotional Stability), and Openness to Experience seem to be the most commonly used terms.

According to Hogan (2005), using personality measures to predict occupational performance has advantages. Firstly, when research is done in a competent manner, the correlations between the standard dimensions of normal personality and job performance criteria that are relevant to the performance construct are reliably above .30 and multiple correlations approach .50. Kinder and Robertson (1994) found that although the mean sample size weighted validity coefficient for personality was around .20, some criterion areas showed much greater validity of up to .33 (uncorrected for reliability and range restriction). They also found that, particularly for some criterion areas, this validity tended to be unrelated to ability. In-line with this research has shown that personality contributes incremental validity in the prediction of job performance above and beyond that accounted for by other predictors, including general mental ability and bio-data (McHenry, Hough, Toquam, Hanson, & Ashworth, 1990; Schmidt & Hunter, 1998). For example, results from Project A (see McHenry et al., 1990) found that the Army could improve the prediction of job performance by adding non-cognitive personality predictors to its battery of selection tests (e.g., ΔR = .11 due to the inclusion of facets of Conscientiousness and Emotional Stability). With regards to learning, such findings correspond to evidence showing incremental validity of personality measures for long-term educational outcomes above and beyond general mental ability (Bagge, Nickell, Stepp, Durrett,

Jackson & Trull, 2004). Hence personality has been found to meaningfully contribute to a selection decision even after one takes account of other important individual differences.

Secondly, unlike cognitive ability measures, personality measures tend not to discriminate between racial groups. In other words, Black individuals generally obtain the same scores as White individuals and women generally the same scores as men. Most personality traits, certainly the Big Five, reveal small to non-existent mean score differences between racial or ethnic groups (Hough, Oswald, & Ployhart, 2001; Mount & Barrick, 1995).[11]

With regards to personality and learning performance, a study conducted by Judge, Higgins, Thoresen and Barrick (1999) showed that the Big Five traits, as a group, explained significant incremental variance in measures of career success even after controlling for the influence of general mental ability. According to Hough and Oswald (2005) personality variables have main effects on a variety of important outcome variables including; career success, task performance as well as educational and training outcomes. In addition recent research has suggested that most of the Big Five traits are significantly related to academic performance (Farsides & Woodneld, 2006).

With reference to the proposed learning potential structural model, cognitive ability in terms of *Abstract Reasoning Ability* and *Information Processing Capacity* were included in the De Goede (2007) learning potential structural model but non-cognitive factors including personality factors were omitted.[12] *Conscientiousness*, one of the Big Five personality factors (Barrick & Mount, 1991), has, therefore, been added here to the proposed learning potential structural model. Conscientiousness, as well as self-efficacy (Gist, Stevens & Bavetta, 1991) mentioned in later sections, appear to be the most relevant personality variables for inclusion in this study.

---

[11] It should however be noted that the absence of ratio-ethnic differences in personality measures should not be construed to mean that the use of personality measures as predictors can be used to ameliorate the adverse impact created by the fair use of valid cognitive predictors (De Goede & Theron, 2010).

[12] Due to the nature of the learning competencies included in the De Goede (2007) learning potential structural model, the model should, however, not be criticized for this exclusion.

Conscientiousness has been shown to positively influence performance across all occupational groups (Barrick & Mount, 1991; Chen, Casper & Cortina, 2001). According to Barrick and Mount (2005) a number of meta-analyses (e.g., Barrick et al., 2001) have significantly increased empirical and theoretical understanding of the nature of the relationship between personality constructs, particularly the Big Five traits, and job performance. Furthermore, Conscientiousness, in particular, has also been found to be the best single personality predictor of workplace performance across a variety of job categories (Barrick & Mount, 1991). Conscientiousness is a particularly valuable resource because it allows individuals to more effectively regulate their other resources and enables them to cope with the many demands they face. Moon (2001) adds that there are now two dispositional predictors in the Industrial/Organisational psychology field whose validity generalises, namely; general mental ability and conscientiousness. 'Thus no matter what job you are selecting for, if you want employees who will turn out to be good performers, you should hire those who work smarter *and* harder' (Mount & Barrick, 1998, p. 856).

With regards to learning performance, the criterion in this study, the broad domain trait of conscientiousness in particular has emerged as a significant predictor of academic success, above and beyond differences in cognitive ability (Goff & Ackerman, 1992).[13] Conscientiousness has been consistently found to positively correlate with academic performance (Chamorro-Premuzic & Furnham, 2003) and has been shown to have a significant positive relationship with training proficiency (Barrick & Mount, 1991; Salgado, 1997). In-line with this, in a study measuring school performance of grade 11 and 12 students, Steinmayr, Bipp and Spinath (2011) found that personality traits together explained 14% of the variance in school performance beyond intelligence and that conscientiousness contributed the largest amount of unique variance.

[13] Research has clearly shown that personality traits can significantly affect levels of academic performance. At higher levels of education personality traits seem increasingly useful to predict academic performance because cognitive ability levels become more homogeneous and restricted in range. This is particularly noticeable in competitive and highly selective programs, where individuals have already been preselected on the basis of their intellectual ability. Non-cognitive traits are then more functional in explaining future success. Thus, the predictive power of ability tests tends to decrease as individuals progress and advance to higher levels of formal education whereas the opposite occurs with personality measures (Chamorro-Premuzic et al., 2006; Jensen, 1980).

Conscientious individuals are characterized as being organised, reliable, self-directed, punctual, scrupulous, persevering, self-disciplined, productive, systematic, dutiful, high on achievement striving and hardworking (Nijhuis, Segers & Gijselaers, 2007). According to Eilam, Zeidner and Aharon (2009) this dimension includes features such as ambition, energy, control of inclinations, diligence, carefulness and being practical. *Conscientiousness* refers to, for the purpose of this study, individuals who are prepared, diligent, make plans and stick to them, thorough in their work, self-disciplined, organised. This dimension is also termed 'the will to succeed,' which expresses intentional goal-driven behaviour. Individuals scoring low in conscientiousness tend to be lethargic, without orientation to succeed and unable to meet their own standards as a results of deficient self-discipline. As might be expected individuals high in conscientiousness are more likely to succeed in the academic realm. In sum, there appears to be a growing body of evidence that supports the importance of measures of personality traits in the prediction of academic and work-related achievement (e.g., Barrick et al., 2001; Salgado, 2003; Van der Walt et al. 2002).

Hypothesis 3 proposes that *Conscientiousness* will positively influence *Time Cognitively Engaged*. In support of hypothesis 3, Conscientiousness has been found to be positively and consistently correlated with different academic outcomes like exams, essays, continuous assessment and supervised dissertations (O'Connor & Paunonen, 2007). O'Connor and Paunonen (2007), in their study using the Big Five predictors and focusing on post-secondary academic performance, found Conscientiousness to be the best trait predictor of exam success. Recent studies also suggest that Conscientiousness accounts for 12–25% of the variance in academic performance (Gray & Watson, 2002; Higgins, Peterson, Pihl & Lee, 2007). Furthermore, Nakayama, Yamamoto and Santiago (2007) found that the number of completed modules (NCM) for masters students correlated with Conscientiousness ($r = .35$, $p < .05$). More specifically, the results indicated that there is a difference in Conscientiousness between those who received a final grade of A and B, suggesting that Conscientiousness may have had an effect on the final grade of students. It was found that the Conscientious students made an effort to learn and to engage with their study material in order to earn A-grades at both bachelors and masters levels.

The Conscientious students were found to exert more effort and spent more time on their study material. These students directed their energy towards the learning tasks in an attempt to form structure and ultimately to transfer existing knowledge to the current tasks which allowed them to complete more modules than their less Conscientious classmates. This makes conceptual sense as; generally individuals high in Conscientiousness are driven to succeed and should therefore be more likely to cognitively engage with their learning material when their drive is focused towards learning. In further support for hypothesis 3, in Woo, Harms and Kuncel's (2007) study, it was found that Goff and Ackerman's (1992) Typical Intellectual Engagement, TIE, scale was moderately correlated with John and Srivastava's (1999) Big Five Inventory, BFI, and specifically with Conscientiousness, but not with Extraversion, Neuroticism and Agreeableness. Additionally, in support of hypothesis 3, Bidjerano and Dai (2007) found that the relationship between Conscientiousness and college-reported grade point average scores, GPA, was mediated by effort regulation. That is, their findings suggest that Conscientiousness was associated with higher grade point averages because those who were higher in Conscientiousness exerted more effort in ways that had the greatest impact on their desired outcome of higher grades.

It is therefore hypothesised that;

Hypothesis 3: In the proposed learning potential structural model it is hypothesised that *Conscientiousness* will positively influence *Time Cognitively Engaged.*

2.4.1.3 Learning motivation

In the past, motivation was *not* considered in personnel selection. It was only after the widely publicised studies in 1924 at the Hawthorne plant of the Western Electric Company (Roethlisberger and Dickson, 1939) and the experiments of Kurt Lewin (Cummings and Worley, 1997) that the utilisation of motivational influences in performance was given important impetus. Cognitive ability was, and is, widely considered to be the single best predictor of learning and performance, especially on

difficult and complex tasks (Hunter, 1986; Hunter & Hunter 1984; Ree & Earles, 1991). Ackerman, Kanfer and Goff (1995) found that cognitive ability accounted for nearly 50% of the variance in task performance. However, more recently it has been argued that ability in the absence of motivation or motivation in the absence of ability is insufficient to yield performance.

With regards to learning performance Wexley and Latham (1981) state that it is widely accepted that learning, and consequently transfer of knowledge, will occur only when trainees have both the ability *and* the motivation to acquire and apply new skills. Colquitt et al. (2000) found that motivation to learn explained variance in learning, over and above cognitive ability, and it was therefore concluded that there was much more than *g* involved in learning.

The De Goede (2007) learning potential structural model acknowledges that cognitive ability affects learning performance through making the provision for two abilities, namely, *Abstract Reasoning Ability* and *Information Processing Capacity*. However the role that motivation plays in learning performance was not formally acknowledged. The foregoing argument presents compelling ground to argue that *Learning Motivation* should be added to the De Goede (2007) learning potential structural model. It seems reasonable to argue that, to achieve success at learning, an individual should in addition to the requisite cognitive abilities also have the motivation to succeed in the learning task.

Gibson, Ivancevich, Donnelly and Konopaske (2006) describe motivation as forces acting on an individual that initiate and direct behaviour. Kanfer (as cited in Dunnette & Hough, 1991) defines motivation as psychological mechanisms governing the direction, intensity and persistence of actions not solely due to individual differences in ability. According to Nunes (2003), motivation involves a choice, by the individual, to expend energy towards one particular set of behaviours. More specifically, *Learning Motivation* can be defined as the desire on the part of learners to learn the learning material (Ryman & Biersner, 1975) and is constitutively defined as such for the purpose of this study.

In further support for the relation between *Learning Motivation* and *Learning Performance,* Clark (1990), Hicks and Klimoski (1987) as well as Ralls and Klein (1991) found, empirically, that motivation and learning performance are related. According to Nunes (2003), training practitioners have found that motivated trainees take a more active role in training and get more from the experience than individuals who are not motivated. Motivated individuals are more primed, or ready to learn. Even if individuals enjoy the training programme or learning material they will not learn very much unless they are motivated to learn, as only then will they be prepared to learn.

With regards to hypothesis 4 which hypothesises that *Learning Motivation* will positively influence *Time Cognitively Engaged,* there appears to be a robust positive relationship between motivation to learn and learning outcomes (Martocchio & Webster, 1992; Noe & Schmitt, 1986; Tannenbaum, Mathieu, Salas & Cannon-Bowers, 1991). Mathieu and Zajac (1990) reported that *Learning Motivation* was related to programme completion and has been cited as an important factor affecting transfer of knowledge indirectly (Tannenbaum et al., 1991), as is the case in the proposed learning potential structural model. In the proposed learning potential structural model it is hypothesised that *Learning Motivation* positively influences *Transfer of Knowledge* and this relationship is mediated by *Time Cognitively Engaged*. Motivation influences direction of attentional effort, the proportion of total attentional effort directed at a task and the extent to which attentional effort toward the task is maintained over time. *Learning Motivation* determines the *extent to which* an individual directs his or her energy towards the learning task in an attempt to form structure and ultimately transfers existing knowledge to the current task (Tannenbaum et al., 1991). Motivation has been shown to influence the extent to which individuals persist at tasks and is a driving force behind the effort they exert. According to Ryman and Biersner (1975) *Learning Motivation* can influence the amount of effort exerted during a training session and serves as the force that brings an individual's intention to learn into action. Nunes (2003) stated that *Learning Motivation* leads an individual to heighten his or her attention which increases that individual's receptivity. In the proposed learning potential structural model, *Learning Motivation* is hypothesised to positively affect *Transfer of Knowledge* although its effect is mediated by *Time Cognitively Engaged.*

Hypothesis 4: In the proposed learning potential structural model it is hypothesised that *Learning Motivation* will positively influence *Time Cognitively Engaged.*

In support of hypothesis 5 which hypothesises that *Conscientiousness* will positively influence *Learning Motivation,* the Big Five traits have been consistently found to relate to motivation (Ilies & Judge, 2002). The primary means through which personality affects work behaviour is expected to be through motivation (Kanfer, as cited in Dunnette & Hough, 1991). The results of Colquitt et al. (2000) suggest that personality variables have a moderate to strong relationship with motivation to learn and learning outcomes. Holton (1996) adds that personality characteristics such as *Conscientiousness* are expected to influence motivation to learn and, in turn, learning itself. Individuals, who score high on *Conscientiousness* generally set high standards for themselves, are more likely to be willing to work hard on tasks (Chen et al., 2001) and generally have a stronger desire to learn (Colquitt & Simmering, 1998). It therefore makes sense that learners high in *Conscientiousness* would be higher in *Learning Motivation* than learners who are less *Conscientiousness.* In support of this Colquitt et al. (2000) found the relationship between *Conscientiousness* and *Motivation to Learn* to be moderately positive (r = .38).

It is therefore hypothesised that;

Hypothesis 5: In the proposed learning potential structural model it is hypothesised that *Conscientiousness* will positively influence *Learning Motivation*.

2.4.1.4 Academic Self-leadership

Academic self-leadership is introduced into the proposed learning potential structural model as a fourth learning competency. The concept of self-leadership first appeared in a 1983 practitioner-orientated book by Manz (1983) and developed out of the

notion of self-management.[14] Self-leadership is deeply rooted in the psychology literature. It has emerged primarily from social learning theory (Bandura, 1977, 1997), social cognitive theory Bandura (1977), self-control literature (e.g., Thoresen & Mahoney, 1974), self-leadership theory (Manz, 1992, Manz & Sims, 1990, 2001) and the intrinsic motivation literature (e.g., Deci, 1975). Nevertheless, although self-leadership incorporates and synthesizes key aspects from several well-known theories, it is generally conceptualized a unique and distinctly valuable constellation of behaviour shaping strategies.

Self-leadership (Manz 1983, 1992; Manz & Neck, 1999; Manz & Sims, 2001) is a process through which individuals influence themselves to achieve the self-direction and motivation necessary to perform (Houghton & Neck, 2002). Self-leadership is an

[14] Self-leadership theory is deeply rooted in the related theories of self-regulation, self-control, and self-management. Self-regulation can be viewed as a process of reducing variation from a set standard (Neck & Manz, 1996). The self-regulation process is comparable to the operation of a mechanical thermostat. The thermostat senses temperature variations relative to a given standard and signals appropriate action to reduce the discrepancy. According to self-regulation theory, discrepancy reduction is facilitated by three basic activities: self-observation, self-evaluation, and self-reaction (Kanfer & Ackerman, 1989). Self-observation involves an allocation of attention to the examination of one's own behaviours. Self-evaluation involves comparing one's behaviours to a set standard or desired state. Finally, if discrepancy is present, then self-reaction is likely to take the form of a drive toward discrepancy reduction. Given a continuum ranging from complete external influence to complete internal influence self-regulation falls closer to the complete external influence end of the spectrum. In other words, due to its largely automatic and unconscious responses to external demands, self-regulation can be viewed as a weaker form of self-influence than either self-management or self-leadership. Self-management theory moves beyond theories of self-regulation by providing specific strategies for managing one's own behaviours in an effort to regulate discrepancy from set standards (Manz, 1986). Self-regulation, however, provides no such prescriptions concerning *how* discrepancy should be reduced. Self-management strategies do not allow for assessment of the standards themselves. Thus, while self-management provides ample self-influence in terms of *how* discrepancy reduction should be approached, it provides no self-influence in terms of *what* should be done and *why* (Manz, 1986). In other words, the purposes and importance of the given standards are not addressed by self-management. Thus self-management is higher in self-influence than self-regulation, but still only moderate in terms of overall self-influence. In contrast, self-leadership is a more encompassing theory of self-influence than either self-regulation or self-management (Manz, 1986). Self-leadership merges the behavioural strategies suggested by self-management and self-control with cognitive strategies based on the concepts of intrinsic motivation and constructive thinking patterns. Self-leadership addresses not only the reduction of discrepancy from performance standards, but also the purposes and appropriateness of the standards themselves (Manz, 1986). Thus, according to self-leadership theory, the discrepancy reduction process is based on internalized, superordinate standards of behaviour rather than on immediate, short-run operating standards (Manz, 1986). Superordinate or higher level standards for self-influence provide specific reasons for self-managed behaviours. By focusing on the reasons for behaviour and by incorporating both cognitive and behavioural strategies, self-leadership theory represents a substantially higher level of self-influence than either self-regulation or self-management. Self-leadership is generally portrayed as a broader concept of self-influence than both self-regulation and self-management. Self-management theory subsumes self-regulation theory and adds a set of specific behavioural strategies for discrepancy reduction. Self-leadership theory subsumes both self-regulation and self-management and specifies additional sets of cognitive-oriented strategies designed to influence behavioural outcomes. Self-leadership also goes beyond self-management and self-regulation by addressing the reasons for behaviour.

enabling process whereby an individual learns to know him or herself better and through this better understanding is able to steer his or her life. According to Manz and Neck (2004) self-leadership allows individuals to control their own behaviour, influencing and leading themselves through the use of a specific set of behavioural and cognitive strategies. In the proposed study self-leadership will be defined more narrowly and specifically and is termed *Academic Self-leadership*. The above definitions of self-leadership are therefore confined to the influencing, self-direction and motivation geared towards the academic domain and learning. Individuals who possess *Academic Self-leadership* qualities will hold a vision of achieving academic success through their thoughts and behaviours which will be managed towards this vision.

Self-leadership is facilitated through the use of strategies. Self-leadership strategies may be divided into three primary categories: *behaviour-focused strategies*, *natural reward strategies*, and *constructive thought pattern strategies*.[15]

Behaviour-focused strategies involve the self-regulation of behaviour through the use of self-assessment, self-reward and self-discipline. This strategy involves identifying specific behaviours to conduct a self-analysis in order to identify long-term goals, identify and self-apply motivational rewards, reduce habitual self-punishment patterns and practice desired behaviours (Manz, 1992). These strategies, encapsulated in behaviour-focused strategies, are designed to foster positive, desirable behaviours while discouraging ineffective behaviours. Behaviour-focused strategies are particularly useful in managing behaviour related to the accomplishment of necessary but unpleasant tasks.

Natural reward strategies involve seeking out work activities that are inherently enjoyable. This set of strategies includes focusing attention on the more pleasant or gratifying aspects of a given job or task rather than on the unpleasant or difficult aspects. Natural reward strategies concern positive perceptions and experiences

[15] Boss and Sims (2008) believe that self-leadership should consist of only two strategies as natural reward strategies 'can easily be folded into the other two self-leadership strategies' (p.142).

associated with tasks to be accomplished. These include a commitment to, belief in and enjoyment of the work for its own value (Manz, 1992). Individuals can facilitate natural reward strategies by modifying perceptions or behaviours associated with task performance.

Finally, *constructive thought pattern strategies* involve the creation and maintenance of functional patterns of habitual thinking. Constructive thought pattern strategies focus on establishing and altering thought patterns in desirable ways. Specific thought-oriented strategies include the evaluation and challenging of irrational beliefs and assumptions, mental imagery of successful future performance and positive self talk.

In sum, the use of self-leadership strategies facilitates a perception of control and responsibility which positively affects performance outcomes (Manz, 1983, 1992). Research has demonstrated positive relations between self-leadership and performance (Bandura & Schunk, 1981, Dolbier, Soderstroom & Steinhardt, 2001; Neck, Neck, Manz & Godwin, 1999). More specifically, with regards to a learning context, Sahin (2011) found education (r = .17, p < .05) to be correlated with the self-leadership indicating that self-leadership may play a role in learning.

The next hypotheses, which relates to *Academic Self-leadership*, will focus on self-leadership as a whole, even though more specific relationships are suggested[16] and will encapsulate all three strategies that make up self-leadership. Future research should, depending on the results obtained in this study, look at each self-leadership strategy separately.[17]

---

[16] Previous empirical research has examined the relation between specific self-leadership behaviours and subsequent performance (e.g., Bandura & Schunk, 1981), but no research examined how the general combination of self-leadership behaviours translates into performance.

[17] It should be noted that according to Houghton (2000) 'although substantial evidence supports the distinctiveness of self-leadership factors and personality factors at the first level of the hierarchical model, the same does not hold true for the second order factors of self-leadership and personality. These factors were very highly correlated and statisticaly indistinct. Thus, while specific sets of self-leadership strategies, skills and behaviours appear to be distinguishable from specific personality traits at lower levels of analysis, general self-leadership and personality factors appear indistinguishable at the higher level of abstraction' (p. 46). The results of this study also indicate that the three self-leadership strategy dimensions are distinct from the three personality traits at lower levels of abstraction, but that the general second order factors for self-leadership and personality are statistically indistinguishable. With this in mind self-leadership was nevertheless (follows on next page)

2.4.1.4.1 Behaviour focused strategies

Behaviour focused strategies are aimed at increasing self-awareness leading to the management of behaviours involving necessary but perhaps unpleasant tasks (Manz, 1992). These strategies include *self-observation*, *self-goal setting*, *self-reward*, *self-corrective feedback, cueing* and *practice*.

- **Self-observation**

Self-observation involves an examination of one's own behaviour aimed at increasing awareness of when and why one engages in certain behaviours. This type of self-assessment can lead to the identification of behaviours that should be changed, enhanced or eliminated. Self-observation can, therefore, lead to a heightened self-awareness and may also enhance and increase self-focus. Research evidence suggests that an increase in self-focus can promote increases in task focus and in the end task performance (Carver, 1975). Additionally, increased observation of one's own behaviour can provide a more accurate and richer interpretation of feedback loops, lending to the identification of specific behaviours that should be changed, enhanced or eliminated, relative to goal attainment. Building on this foundation, with accurate information regarding current behaviour and performance levels, an individual can effectively set personal goals that may lead to improved performance (Manz & Neck, 1999).

- **Self-goal setting**

S*elf-goal setting* is vital to learning. Self-goal setting involves creating a deadline for a desired end-state. In order for learning performance to occur it is essential that the learner set goals. Without goals the individuals' potential may simply not be realised through performance accomplishments. The research on goal-setting (Locke & Latham, 2002) is extensive and this particular aspect of self-leadership is 'likely the

---

taken as a whole in addition to conscientiousness as the study interprets self-leadership as a learning competency and potential latent variable.

most critical' (Boss & Sims, 2008, p. 143) and relevant to learning performance. When individuals consciously and intentionally set academic goals themselves, they generally set more difficult and specific goals which tend to result in increased effort, persistence and ultimately better task performance (Locke & Latham, 1990). Goals-setting has been examined for its impact on transfer of knowledge (e.g., Wexley & Baldwin, 1986) and has been found to affect transfer of knowledge. In agreement with this Reber and Wallin (1984) showed that goal setting leads to high levels of skill transfer of knowledge in the work setting.

Hypothesis 6 proposes that *Academic Self-leadership* will positively influence *Learning Motivation.* This relationship is put forward with regards to the sub-strategy *self-goal setting*. However, even though this more specific path is put forward between *self-goal setting* and *Learning Motivation*, the broader construct *Academic Self-leadership* was tested when empirically evaluating this hypothesis. In support of hypothesis 6, research has shown that motivation is often considered a process that is triggered by leadership techniques like goal setting to influence subsequent performance (Campion, Medsker & Higgs, 1993). Further, self-leadership is built upon the theoretical foundation of social learning theory (Bandura, 1977) which postulates that individuals influence their own motivation. Self-leadership theory can therefore be classified as a motivational theory in which motivation is assumed to be triggered by behavioural and cognitive strategies that influence the initiation, direction, intensity and persistence of behaviour (Manz, 1992). According to Houghton and Neck (2002) a multitude of research has shown that the act of setting challenging and specific goals can have a dramatic effect in motivating individual performance (Locke & Latham, 1990). Incorporating specific goal-setting strategies into a task appears to aid achievement and increase motivation by serving as a reward or incentive for effort and persistence on the task. Goal-setting serves as vital cognitively based sources of self-motivation as under conditions in which external rewards are minimal and discontinuous individuals must partly serve as agents of their own motivation. It is therefore hypothesised that *Academic Self-leadership*, self-leadership aimed towards learning, should influence *Learning Motivation*.

Hypothesis 6: In the proposed learning potential structural model it is hypothesised that *Academic Self-leadership* will positively influence *Learning Motivation*.

This above relationship is hypothesised as bi-directional. It is therefore also hypothesised that *Learning Motivation* will positively influence *Academic Self-leadership* as *Learning Motivation* serves as a mobiliser and driver of *Academic self-leadership*.

Hypothesis 7: In the proposed learning potential structural model it is hypothesised that *Learning Motivation* positively influences *Academic self-leadership.*

- **Self-reward**

The third strategy, *self-reward*, is a way of congratulating oneself, no matter how small and can be effectively used to reinforce desirable behaviours and goal attainments (Manz & Sims, 1990). Empirical results indicate that goal-setting that includes self-reward is an effective way to increase positive transfer of training (Gist et al., 1991). Self-rewards can be tangible or abstract but the rewards must be concrete and of some value to the individual if it is to provide sufficient leverage for action.

Hypothesis 8 states that *Academic Self-leadership* will positively influence *Time Cognitively Engaged*. This relationship is put forward with regards to the sub-strategy of self-set rewards and self-set goals. However, even though this more specific path is put forward between self-set rewards and *Time Cognitively Engaged*, the broader construct *Academic Self-leadership* was tested when empirically evaluating this hypothesis. In support of hypothesis 8, self-set rewards, coupled with self-set goals, can aid significantly in energising effort necessary to accomplish the goals (Manz & Neck, 2004). This occurs as the creation of self-reward contingencies increases the

value of goal achievement, thereby leading to increased effort and persistence and consequently engagement in pursuit of goal attainment.

It is therefore hypothesised that;

Hypothesis 8: In the proposed learning potential structural model it is hypothesised that *Academic Self-leadership* will positively influence *Time Cognitively Engaged.*

- **Self-correcting feedback**

Self-correcting feedback, or self punishment, like self-rewards can also be used to shape desirable behaviours effectively. Self-correcting feedback consists of an introspective examination of failures and undesirable behaviours leading to the reshaping of such behaviours (Manz & Sims, 2001).

- **Cueing strategies**

The fifth strategy, with regards to behaviour focused strategies, *cueing strategies*, involves manipulating the external environment to encourage desirable behaviours and to reduce undesirable or ineffective behaviours in order to achieve a goal. Concrete environmental cues can serve as an effective means of encouraging constructive behaviours and reducing or eliminating destructive ones (Manz & Neck, 2004) that can keep an individual engaged, hold his or her attention and keep effort focused on goal attainment (Neck & Houghton, 2006). Individuals that make use of cueing strategies with regards to learning should therefore be more inclined to engage with their learning material, an argument which further supports hypothesis 8.

- **Practice**

The last strategy, with regards to behaviour focused strategies, is *practice* or rehearsal of desired behaviours before actual performance. This can allow for the correction of problems and improve performance (Manz, 1992). Practice of any activity can lead to increased performance. *Academic Self-leadership* is therefore hypothesised to positively influence *Learning Performance* in the proposed learning potential structural model, although this relationship is indirect and mediated by a number of variables included in the learning potential structural model. Practice of learning tasks can also enhance *Academic Self-efficacy* as seen in hypothesis 9 where the broader construct *Academic Self-leadership* is hypothesized to positively influence *Academic Self-efficacy*.

2.4.1.4.2 Natural rewards

Natural rewards are designed to leverage intrinsic motivation to enhance performance (Manz & Neck, 2004). Self-leadership extends beyond external rewards to focus on the natural rewards that result from the performance of the task or activity itself (Manz & Neck, 2004). Natural reward strategies include efforts toward building more pleasant and enjoyable features into a given task or activity so that value is obtained from the task itself and the job becomes naturally rewarding. Alternatively, an individual could change his/her perceptions of an activity by focusing on the task's inherently rewarding aspects (Manz & Neck, 1999). In other words there are two primary natural reward strategies. The first involves building more pleasant and enjoyable features into a given activity so that the task itself becomes naturally rewarding (Manz & Neck, 2004). The second consists of shaping perceptions by focusing attention away from unpleasant aspects of a task and refocusing it on the tasks' inherently rewarding aspects (Manz & Neck, 2004). Both strategies are likely to create feelings of competence as well as self-determination (Deci & Ryan, 1985) which in turn energize performance enhancing task-related behaviours.

In further support of hypothesis 6 that proposes that *Academic Self-leadership* will positively influence *Learning Motivation,* it is hypothesised that natural reward strategies will positively influence *Learning Motivation* as rewards are known to generate motivation. It should be noted that this relationship is put forward with regards to the sub-strategy of natural rewards. However even though this more specific path is put forward between natural rewards and *Learning Motivation*, the broader construct *Academic Self-leadership* was included when empirically evaluating this hypothesis.

2.4.1.4.3 Cognitive thought pattern strategies

The third and final strategy, *cognitive thought pattern strategies*, deals with the creation and alteration of cognitive thought processes. It involves the creation, and maintenance of functional constructive patterns of habitual thinking (Manz & Neck, 1991; Neck & Manz, 1992) that can positively impact performance. A survey of 3580 managers indicated that thought patterns of higher performing managers significantly differed from those of lower performing managers (Manz, Adsit, Campbell & Mathison-Hance, 1988).

Constructive thought pattern strategies have been refined and more fully developed under the label of *Thought Self-leadership* (TSL) (Manz & Neck, 1991; Neck & Manz, 1992). TSL suggests that individuals can influence and control their own thoughts through the use of specific cognitive strategies designed to facilitate the formation of constructive thought patterns or habitual ways of thinking (Neck & Manz, 1992). Many individual performance problems result from dysfunctional thinking (Ellis, 1977). These distorted thoughts generally result from underlying dysfunctional beliefs and assumptions that are often triggered by stressful or troubling situations. TSL suggests that through a process of self-analysis, one's dysfunctional beliefs and assumptions can be identified, confronted and replaced with more rational ones (Manz & Neck, 1999; Neck & Manz, 1992). Specific TSL strategies include *self-management of beliefs and assumptions*, *mental imagery and self-talk*. The influence of *self-talk* and *mental imagery* on enhanced behaviour, emotions and cognitions has

been empirically supported in education (Swanson & Kozleski, 1985). It has also been demonstrated that employees who participated in a TSL training intervention experienced enhanced mental performance, affective states, job satisfaction and self-efficacy expectations compared to those not receiving the training (Neck & Manz, 1996).

- **Self-management of beliefs and assumptions**

The first strategy under cognitive thought patterns or TSL strategies is *self-management of beliefs and assumptions*. Managing beliefs and assumptions involves the evaluation and challenging of irrational beliefs and assumptions, which can be a serious hindrance to individual performance, and replacing them with more constructive thought processes (Manz & Neck, 2004). By confronting beliefs and assumptions that lead to distortion and replacing them with more realistic and less dysfunctional ones, feedback may become less distorted and self-regulation more effective (Neck & Houghton, 2006) which can lead to more effective learning performance.

- **Mental imagery**

Mental imagery involves imagined experiences, more specifically, imagining oneself engaged in important performance actions. Through the use of mental imagery it is possible to create, and symbolically experience, behavioural outcomes prior to actual performance (Neck & Manz, 1992). Mental imagery creates a tangible target that can be 'seen' before it actually occurs, providing much motivation (Boss & Sims, 2008). This again indicates the positive influence that *Academic Self-leadership* may have on *Learning Motivation* and therefore adds support for hypothesis 6.

In support of hypothesis 9, which states that *Academic Self-leadership* positively influences *Academic Self-efficacy,* a series of studies conducted by Ruvolo and Markus (1992) lends support to the self-efficacy enhancing qualities of TSL. They further proposed that the effect of mental practice on task performance can be explained by the intervening effect of self-efficacy. Specifically, they argue that mental practice facilitates enactive mastery, vicarious experience and self-guided

verbal persuasion which are three sources of information that Bandura (1977) identified as necessary for increasing self-efficacy. Individuals can therefore symbolically experience the mastery of a task during mental practice. Further Morin and Latham (2000) results revealed that mental practice explained a significant amount of the variance in self-efficacy (R^2 = .16, $p < .05$).

Therefore it is hypothesised that;

Hypothesis 9: In the proposed learning potential structural model it is hypothesised that *Academic Self-leadership* positively influences *Academic Self-efficacy*.[18]

Furthermore, with regards to mental imagery, it has been found that those individuals who envision the successful performance of a task or activity beforehand are much more likely to perform successfully when faced with the actual situation (Manz & Neck, 1999). Empirical research provides evidence and support for this assertion and a meta-analysis performed by Driskell, Copper and Moran (1994) found a significant positive effect of mental imagery on individual performance outcomes.[19]

- **Self-talk**

Self-talk or self-dialogue can be defined as what one covertly tells oneself. These self-dialogues usually take place at unobservable levels as individuals evaluate, instruct and react to themselves mentally (Manz & Neck, 1991; Neck & Manz, 1992). Through the effective utilization of self-talk strategies, an individual can learn to suppress and discourage negative and pessimistic self-talk while fostering and encouraging optimistic self-dialogues (Seligman, 1991). By replacing negative and dysfunctional self-talk patterns with more constructive internal dialogues performance may be enhanced (Manz & Neck, 1999). Swanson and Kozleski's

[18] However, even though this more specific path is put forward between *mental practice* and *Learning Motivation*, the broader construct *Academic Self-leadership* was tested when empirically evaluating this hypothesis.

[19] They further found that the more a task requires mental operations like comparing, organising or categorising information, the greater the benefits of mental practice were on subsequent performance ($r = .44$, $p < 0.01$). Research also indicates that the ability to visualise moderates the relationship between mental practice and performance (Ryan & Simons, 1981).

(1985) study showed that self-talk training can positively influence academic performance in handicapped children. More specifically, research suggests that self-statements correspond to emotional states, which in turn affect behaviours and cognitions (Neck & Manz, 1992). Over time, constructive self-talk should become internalized so that the learner learns to use self-talk to improve their perceptions of difficult situations. The fostering and encouraging of optimistic self-talk with regards to learning intuitively should therefore enhance *Academic Self-efficacy*. This again supports hypothesis 9 which states that *Academic Self-leadership* positively influences *Academic Self-efficacy* as *Academic Self-leadership*, with all three first level strategies included, has been hypothesised to influence *Academic Self-efficacy* even though more specific paths with regards to self-leadership strategies have been indicated.

In sum, individual's beliefs, *self-talk* and *mental imagery* combine to impact the individual's *thought patterns.* Thought patterns have been described as habitual ways of thinking (Manz & Neck, 1999; Neck & Manz, 1992) that affect emotional and behavioural reactions (Neck & Manz, 1992). This paradigm states that constructive TSL through effective application of these cognitive strategies can enhance individual cognitive processes, behaviour and affective states (Godwin, Neck & Houghton, 1999). Individuals often, in general, adopt one of two opposing thought patterns 'opportunity thinking' or 'obstacle thinking.' Opportunity thinking involves habitually thinking in terms of worthwhile challenges, opportunities and constructive approaches to difficult or unpleasant situations whereas obstacle thinking, in contrast, focuses on reasons to give up and retreat from problems and difficulties. Opportunity thinkers have been found to take a more active role in dealing with challenges through exerting greater effort and persistence to overcome challenging situations. According to Neck et al. (1999) if individuals enact constructive TSL, such as opportunity thinking, self-efficacy expectations should be enhanced (Neck & Manz, 1992). An empirical TSL training-based study revealed that those who participated in a TSL training program experienced enhanced self-efficacy over those who were not trained in TSL (Neck & Manz, 1996). This therefore again provides support for hypothesis 9 which states that *Academic Self-leadership* positively influences *Academic Self-efficacy* (as *Academic Self-leadership*, with all three first level strategies included, has been hypothesised to influence *Academic*

Self-efficacy even though more specific paths with regards to self-leadership strategies have been indicated).

Furthermore, with regards to hypotheses 9 which states that *Academic Self-leadership* positively influences *Academic Self-efficacy,* research shows that self-efficacy is probably the single most mentioned self-leadership outcome variable (e.g., Manz & Neck, 2004; Neck & Manz, 1992; Neck & Houghton, 2006). In fact, a key objective of all self-leadership strategies is the enhancement of self-efficacy perceptions in advancement of higher performance levels (Manz & Neck, 1999; Manz & Neck, 2004). In support of this, empirical evidence maintains that self-leadership increases self-efficacy perceptions. Results have indicated a significant relationship between self-leadership strategies, self-efficacy perceptions and task performance (Bandura & Cervone, 1986; Bandura & Schunk, 1981; Prussia, Anderson & Manz, 1998). In-line with this, Zimmerman (1990) found self-regulation to be positively linked to self-efficacy. More recently, Prussia et al. (1998) examined the hypothesized role of self-efficacy as a mediator of the relationship between self-leadership strategies and performance. Significant relationships between self-leadership strategies, self-efficacy perceptions and task performance were found (Prussia et al. 1998). Further, Redmond, Mumford and Teach (1993) found that leader behaviours, including task direction and goal-setting, positively influenced self-efficacy expectations. Moreover, Neck and Manz (1992) reported a significant difference in self-efficacy levels between a group that had received self-leadership training and a non-training control group.

Theoretical and empirical research therefore provides evidence that self-leadership techniques enhance self-efficacy as individuals gain confidence due to greater self-control (Manz & Sims, 1989; Boss & Sims, 2008). Stated differently, to the extent that individuals are in a position to experience confidence through greater self-control (i.e., self-leadership skill development), efficacy perceptions will be enhanced (Manz & Sims, 1996).

The relationship postulated in hypothesis 9 is further hypothesised as a reciprocal relationship. As mentioned, *Academic Self-leadership,* more specifically constructive thought patterns, can enhance *Academic Self-efficacy*, as presented through

hypothesis 9. Research supports this reciprocal influence (e.g., Krueger & Dickson, 1994) and it is therefore hypothesised that *Academic Self-efficacy* positively influences *Academic Self-leadership* as presented in hypothesis 10.

Hypothesis 10: In the proposed learning potential structural model it is hypothesised that *Academic Self-efficacy* influences *Academic Self-leadership*.

In support of hypothesis 10; Williams (1997, p. 149) has stated that 'people with high self-efficacy will tend to be better self-leaders.' According to Hannah, Avolio, Luthans and Harms (2008), effective leadership requires high levels of confidence which points to the idea that self-efficacy is important for becoming a successful leader. Houghton's study (2000) provided empirical results that emphasized the key role of self-efficacy perceptions in self-leadership theory. Furthermore, Prussia et al. (1998) identified self-efficacy as an influential construct in the use of self-leadership strategies. Another study, conducted by Norris (2008), found a positive significant correlation between general self-efficacy and general self-leadership ($r = .33$, $p < .01$) where general self-efficacy significantly contributed towards general self-leadership ($B = .33$, $t = 4.09$, $p < .01$). Popper and Mayseless (2007) even regard self-efficacy as one of the building blocks for leader development as an individual's judgement about his or her capability to learn will influence whether that individual will manage his or her learning by making use of academic self-leadership strategies.[20]

Kanfer and Ackerman (1989) explain that self-regulatory activities are triggered when the perceived difficulty of achieving the intention exceeds some threshold and when the individual is confident that he or she has the capability to successfully attain the goal (Bandura, 1977). Stated differently, the activation of self-regulatory processes is

[20] It is important to note that there is a major difference between possessing self-regulatory knowledge and skills and being able to put these skills and knowledge into practice, and as well as maintain such behaviour. Self-regulatory skills will not contribute much if learners cannot get themselves to apply them persistently in the face of difficulties, stressors and competing attractions. It is one thing to possess self-regulatory skills, but another to be able to adhere to them in perturbing situations. *Academic self-efficacy*, being a belief in one's academic capability, should provide a sense of resiliency needed to overrule emotional and psychosocial factors that may affect self-regulative efforts (Zimmerman, Bandura, & Martinez-Pons, 1992). In other words a firm belief in one's academic capability may provide the staying power behind Academic Self-leadership.

expected when one perceives him or herself to possess adequate abilities or skills for accomplishing the goal. Bandura, Barbaranelli, Caprara and Pastorelli (2001) support this and add that perceived self-efficacy plays a pivotal role in the process of self-management because it affects actions not only directly, but also through its impact on cognitive, motivational, decisional and affective determinants.

In the proposed learning potential structural model *Academic Self-efficacy* positively influences *Academic Self-leadership* both directly as well as indirectly. In both cases *Academic Self-leadership* then indirectly influences *Learning Performance*. Research supports this contention as can be seen through Prussia et al.'s (1998) study. These authors showed that self-efficacy fully mediates the influence of self leadership on performance and their results were consistent with previous research examining the mediating effects of self-efficacy.

Hypothesis 11 states that *Conscientiousness* positively influences *Academic Self-leadership.* In support of this hypothesis it is argued that personality constructs may be more distally related to performance constructs than are motivational and goal-based constructs, which may mediate personality-performance relations Kanfer (as cited in Dunnette & Hough, 1991). Self-leadership may serve as a mediator in the relationship between personality and learning competency potential. Empirical evidence provides some support for the existence of relationships between self-leadership and various personality concepts (Neck & Houghton, 2006). Houghton, Bonham, Neck and Singh (2004) as well as Stewart, Carson and Cardy (1996) add that self leading behaviours may be determined primarily by the individual's configuration of related personality traits. In other words, self-leadership may aid in explaining how personality manifests itself in behaviour. Muller's (2006) study indicates that personality factors may facilitate or impede the practice of self-leadership which is also supported by the results of the Houghton et al. (2004) study. Insomuch as self-leadership represents an expanded theory of self-regulation, it seems likely that personality is also related to self-leadership. Williams (1997) has suggested that a variety of personality traits are likely to be associated with self-leadership skills in meaningful ways. In particular, Williams (1997) proposed positive associations between self-leadership skills, conscientiousness and self-efficacy.

In agreement with this in Houghton's (2000) results it is suggested that self-leadership and personality factors are significantly related.[21] In his study it was found that self-leadership represents a distinct constellation of strategies that are significantly related to certain key personality traits. He found that of the Big Five factors of personality *Conscientiousness*, specifically, was significantly related to all three self-leadership dimensions. This is in agreement with this Williams (1997) and Stewart et al. (1996) who have suggested that self-leadership has a positive association with personality and *Conscientiousness* in particular. Individuals high in *Conscientiousness* are likely to be better self-regulators and a number of previous studies have demonstrated a relationship between self-regulation and *Conscientiousness* (Koestner, Bernieri & Zuckerman, 1992). Self-leadership, a more highly developed form of self-regulation, should thus be positively related to *Conscientiousness*. Furthermore, Houghton et al. (2004) found that the *Conscientiousness* factor was significantly positively related with the behaviour focused skills factor (r = .57), the natural reward skills factor (r = .33) and the constructive though processes skills factor (r = .29). Further, Stewart et al. (1996) directly examined the relationship between self-leadership and *Conscientiousness* in their field study involving employees at a hotel/resort and found a positive relationship between *Conscientiousness* and employee self-directed behaviours.[22] Given this evidence, it seems likely that *Conscientiousness* is positively related to self-leadership. *Conscientiousness* should then, in a learning context, positively influence *Academic Self-leadership* and it is therefore hypothesised that;

Hypothesis 11: In the learning potential structural model it is hypothesised that *Conscientiousness* positively influences *Academic Self-leadership*.

---

[21] Some theorists have questioned whether self-leadership is a unique and distinguishable concept to certain personality traits. Nevertheless, the findings of Stewart et al. (1996) provide preliminary support for the hypothesis that self-leadership is distinct from personality. In addition, Houghton (2000) provided evidence that the self-leadership dimensions of behaviour-focused strategies, natural reward strategies and constructive thought strategies are distinct from, yet related to, the personality traits of extraversion, emotional stability and conscientiousness.

[22] Additionally, their study provided evidence supporting the notion of Conscientiousness as a moderator of self-leadership training effectiveness. More specifically, those participants who scored low in Conscientiousness showed much greater improvement in self-directed behaviours following a self-leadership training intervention than those who had scored high in Conscientiousness.

2.4.1.5 Academic Self-Efficacy

In the cognitive domain, with regard to the decisional effect, belief in one's efficacy shapes the course of development during formative periods by influencing the types of activities and social environments individuals select. Such choices determine which of their potentialities individuals develop, the types of options that are foreclosed and those that remain realizable (Bandura, 1997). It is learners' beliefs in their academic capabilities, rather than their actual academic performances, that tend to shape the course of their developmental trajectories (Bandura et al. 2001).

Self-efficacy is a construct derived from social cognitive theory, a theory positing a triadic reciprocal causation model in which behaviour, cognitions and the environment all influence each other in a dynamic fashion (Bandura, 1977). Self-efficacy refers to an individual's opinion of their own intrinsic ability to organise their behaviour to do things in such a way as to be satisfied with the outcome (Bandura, 1986). The term can be defined as 'people's judgments of their capabilities to organise and execute courses of action required to attain designated types of performances' (Bandura, 1986, p. 391). Basically, it concerns the answer to the question, 'Can I do this task in this situation?' Self-efficacy, therefore, is not a measure of the skills a person possesses but concerns the beliefs that they have about what they can do under different sets of conditions with whatever skills they possess (Bandura, 1997). In other words self-efficacy involves judgements of capabilities to perform tasks rather than personal qualities (Bandura, 1995, 1997). The concept of self-efficacy is less concerned with the number of cognitive, social, emotional and behavioural skills a person has and more with what an individual believes can be done with what is available under a variety of circumstances (Bandura, 1997). It relates to enduring patterns in cognition and is termed by some as a personality trait (e.g., Bandura, 1991).

In terms of the relationship between self-efficacy and outcomes, the level of specificity of the outcome to be predicted should be considered. Self-efficacy has been assessed on different levels of specifity and three levels of self-efficacy can be distinguished (Bandura, 1977; Woodruff & Cashman, 1993). Self-efficacy was originally defined as *task* specific (e.g., Bandura, 1977) which is probably the most

common and widely researched and refers to self-efficacy for performance of a specific task. *Domain* efficacy is more general and refers to efficacy for performance within an entire definable domain of tasks, for example research self-efficacy or in this study *'Academic Self-efficacy'*. There may be differences in self-efficacy across tasks within the domain but overall there is a global belief in one's self-efficacy within that domain. Lastly, *general* self-efficacy refers to an individual's overall self-confidence for dealing with multiple domains in life.

In this study the domain-specific *Academic Self efficacy* is used.[23] Self-efficacy theory proposes that these more specific judgments will be more closely related to an individual's actual engagement and learning than general self-efficacy measures.

Lackaye, Margalit, Ziv and Ziman (2006) define academic self-efficacy as an individual's perceived capability to manage learning behaviour, master academic subjects and fulfil academic expectations. Schunk (1991) defines academic self-efficacy as subjective convictions that one can successfully carry out given academic tasks at designated levels. Additionally academic self-efficacy has been referred to as beliefs about one's capability to learn or perform effectively, such as to solve a particular type of math problem. Academic self-efficacy therefore pertains to individuals' perceptions about learning (Girasoli & Hannafin, 2008) and is defined here as the belief that one can successfully execute the actions needed to produce a desired academic outcome. It refers to the beliefs about one's capability to learn or perform academic tasks effectively.

With regards to the relevance of including *Academic Self-efficacy* in the proposed learning potential structural model; self-efficacy has been shown to play a role in performance. A study conducted by Konradt and Andressen (2009) showed self-efficacy ($B = .07$, $p < .05$) to have a positive impact on performance. In a model, developed by Neck et al. (1999), self-efficacy perceptions were shown to directly

[23] It should be noted that future research may benefit from splitting academic self-efficacy into pre and post-training academic self efficacy as these two variables appear to correlate differently with individual differences, learning competencies and learning outcome variables, as was the case in Colquitt, LePine and Noe's (2000) study. Nevertheless, it is hoped that this research will serve as a platform for more specific, elaborated future research.

influence individual performance and this logic was supported by Bandura (1977). More specifically regarding learning performance, according to Maurer and Paimer (1999), the belief that one can develop may play a large role in whether one develops or not. Furthermore, the more an individual feels a sense of confidence in their ability to improve and develop their skills, the more likely they are to feel favourably toward development activities, to be interested in them, to intend to participate and then to actually improve their skills and subsequently learn from the activity. Individuals who believe they can exercise some control over their own learning and master their coursework generally achieve success in their academic pursuits. The intuitively appealing notion that one's belief in oneself can have self-fulfilling consequences, have struck a chord with applied researchers across several domains (Bandura, 1997) particularly in learning and training contexts (Goldstein & Ford, 2002). Self-efficacy, therefore, not only has a relationship with performance and achievement in general, it also has a relationship, more specifically, with learning performance. There is a vast amount of empirical research on self-efficacy that indicates a strong and consistent link between self-efficacy and academic achievement. According to Schunk (1991) self-efficacy is an important mediator and determinant of education-psychological variables and performance outcomes. Differences in self-efficacy are associated with bona fide differences in skill level (Gist & Michell, 1992) and evidence has demonstrated that self-efficacy influences the degree of skill acquisition and retention in learning situations (Gist et al., 1991) which in turn can boost self-efficacy in a mutually enhancing process. In-line with this the results of Lee and Klein's (2002) study showed that self-efficacy and learning were significantly and positively correlated, both early and later on in training. The work of Pajares (1996), furthermore, highlights the importance of self-efficacy as a mediator and determinant of mathematics and writing performance outcomes. Wadsworth, Husman, Duggan, and Pennington (2007) further found that learning success was dependent, in part, upon the self-efficacy of students. Bandura et al.'s (2001) research indicated how a high sense of self-efficacy for self-regulated learning and mastery of academic coursework fosters academic aspirations and scholastic achievement (Caprara, Barbaranelli, & Pastorelli, 1998; Zimmerman, Bandura & Martinez-Pons, 1992). These authors reported that children of high perceived academic efficacy achieve good academic progress, have high educational aspirations and favour career levels in fields that require advanced

educational development. Another study conducted by Multon, Brown and Lent (1991) showed that student percentile scores on self-efficacy, motivation, concentration, information processing and self-testing strategy scales significantly predicted final grade. More specifically, a univariate analysis, breaking students into groups by final grade, revealed that the student grade groups were significantly different in their self-efficacy and motivation levels. Multon, Brown and Lent (1991) also reported that self-efficacy beliefs were generally related to academic behaviours in ways that support Bandura's (1977) theory and its extension to educational-vocational behaviour (Hackett & Betz, 1981; Schunk, 1987). Their study provides support for the relationships of self-efficacy beliefs to academic performance and persistence. Effect size estimates (.38 for performance and .34 for persistence) suggested that, across various types of student samples designs and criterion measures, 'self-efficacy beliefs account for approximately 14% of the variance in students' academic performance and approximately 12% of the variance in their academic persistence' (p. 34).

In further support of the relationship between self-efficacy and learning Li (1988) found that gifted 4th and 7th graders did not differ from their age-mates in terms of their self-perceptions of social acceptance, physical appearance or general self-worth. However, they did feel more academically able. With regards to older learners, Lane, Lane and Kyprianou (2004) found that self-efficacy contributed strongly to the prediction of grades in postgraduate students enrolled in a business course. Self-efficacy has therefore been shown to be an important personal resource and has a strong relationship with career development as was shown by Betz (1994). Self-efficacy beliefs have also been shown to predict level of mastery of educational requirements when variations in actual ability, prior level of academic achievement, scholastic aptitude and vocational interests were controlled (Brown, Lent, & Larkin, 1989; Lent, Lopez, & Bieschke, 1993). According to Zimmerman et al. (1992) the influence of efficacy beliefs within academic contexts is pervasive as a significant predictor of academic performance. Self-efficacy beliefs seem to have greater predictive value of learning and achievement outcomes in various cognitive domains (e.g., language or mathematics) as compared to other motives, such as task value or test anxiety (Wolters & Pintrich, 1998). Furthermore, the independent

contribution of self-efficacy beliefs to cognitive functioning was examined experimentally by Bouffard-Bouchard (1990) where high or low self-efficacy beliefs were instilled arbitrarily in students irrespective of their actual performance. Students whose sense of self-efficacy was raised set higher aspirations for themselves, showed greater strategic flexibility in the search for solutions, achieved higher intellectual performances and were more accurate in evaluating the quality of their performances, than were students of equal cognitive ability who were led to believe they lacked such capabilities. Bouffard-Bouchard's (1990) results indicated that self-efficacy beliefs contributed to accomplishments both motivationally and through support of strategic thinking. The author concluded that high self-efficacy is necessary for learning. Individuals who believe they are capable of learning may take more risks and be more willing to move out of their comfort zone so as to try something new in order to learn. These results are in-line with other studies where levels of self-efficacy during task work have predicted how well students performed (e.g., Multon et al., 1991; Wigfield & Eccles, 1992; Zimmerman et al., 1992). Another study, conducted by Colquitt et al. (2000), found that trainee's self-efficacy was strongly and positively related to declarative knowledge (r = .27), skills (r = .16) and greater utilization of the trained materials once the trainee returned to the work environment (r = .58).

In sum, the self-efficacy construct has been documented as an important factor for learning and achievement and the importance of self-efficacy for the understanding and predicting of career-relevant behaviours, such as academic achievement, has been recognised by many researchers (Bell & Kozlowski, 2002; Lodewyk & Winne, 2005). Thus, a growing body of research relating self-efficacy beliefs to career and academic outcomes has been generated.

It should further be noted that findings from diverse lines of research on the contributions of self-efficacy beliefs to academic achievement further confirm that belief in one's capabilities contributes independently to academic achievement, rather than simply being a reflection of prior performance (Bandura, 1997). Both experimental and naturalistic studies have shown that academic self-efficacy makes an independent contribution after the effects of prior performance are partialled out (Bandura, 1997; Bouffard-Bouchard, 1990; Gore, 2006: Zimmerman & Martinez-

Pons, 1986) indicating that *Academic Self-efficacy,* as included in the proposed learning potential structural model, should provide incremental validity in explaining *Learning Performance*.

In the proposed learning potential structural model it is hypothesised, as stated in hypothesis 12, that *Academic Self-efficacy* positively influences *Learning Motivation*. In support for hypothesis 12, studies have related academic self-efficacy directly to achievement, although recent investigations have begun to examine the impact of mediating motivational behaviours in greater depth. Individuals who believe that they are capable of learning may be more motivated to learn. Students' self-efficacy has been shown to influence school performance by impacting motivation (Bandura, 1977, 1997; Deci & Ryan, 1985). Wigfield and Eccles (2002) believe that self-efficacy can affect subsequent motivation in an activity and much research shows that self-efficacy influences learning motivation, learning and achievement (Pajares, 1996). Students' self-efficacy beliefs have been found to play an especially important role in motivating them to learn. Bandura (1977, 1997), for example, indicated that self-efficacy determines the level of motivation and academic achievement which has been demonstrated in many studies (e.g., Narciss, 2004). Among the mechanisms of human agency, none is more central or pervasive than an individual's beliefs of self-efficacy. 'Whatever other factors may operate as guides and motivators, they are rooted in the core belief that one has the power to produce effects by one's actions' (Bandura et al., 2001, p. 187). Such beliefs influence aspirations and strength of commitments to them, the quality of analytic and strategic thinking, level of motivation and perseverance in the face of difficulties and setbacks, resilience to adversity and casual attributions for successes and failures (Bandura, 1995, 1997; Zimmerman & Schunk, 1989). Self-efficacy beliefs determine how an individual feels, thinks, motivates him or herself and behaves. It is an important term in the broader motivational domain and can boost or impede motivation (Dixon & Schertzer, 2005). Considerable research over the past several years has shown that academic self-efficacy heightens motivation (Bandura, 1993).

Moreover, theories of motivation stress the importance individuals attach to feelings that they will be successful in the given task (Bandura, 1997). Bandura and Locke (2003) agree that self-efficacy enhances motivation and performance attainments

and Hammond and Feinstein (2005) further reported that those with relatively high self-efficacy have greater motivation to participate in learning, whereas those who lack of confidence may hold fears that de-motivated them from taking courses. Finally, Noe and Wilk (1993) have claimed that learner's self-efficacy beliefs have been found to play an especially important role in motivating them to learn. To this end research has consistently shown positive relationships between self-efficacy, motivation to learn and learning (e.g., Gist et al., 1991).

It is therefore hypothesised that:

Hypothesis 12: In the learning potential structural model it is hypothesised that *Academic Self-efficacy* positively influences *Learning Motivation*.

With regards to the proposed learning potential structural model and in-line with the foregoing argument, according to Nunes (2003), it is likely that an indirect positive relationship between self-efficacy and training outcomes exist. Individuals with a high self-efficacy have been found to out-perform individuals with low self-efficacy. This may occur as individuals with high *Academic Self-efficacy* hold a belief that they are capable of mastering the training content to be learnt and are more likely to learn more during training (Gist, Schwoerer & Rosen, 1989). *Academic Self-efficacy* can therefore be considered as a predictor of training success, as a process variable during training, or as a desirable outcome of the training (Tannenbaum & Yukl, 1992). Research has indicated a relationship between self-efficacy and *Transfer of Knowledge*. Kozlowski, Gully, Brown, Salas, Smith and Nason's (2001) research indicated that self-efficacy is related to the adaptability of knowledge and skills to meet the demands of the new situation as well as resilience in order to maintain motivation and concentrate. Bandura et al. (2001) and Mathieu, Tannenbaum and Salas (1992) reported that *Transfer of Knowledge,* from what is learnt in training to the workplace, is influenced by self-efficacy. Colquitt et al. (2000) found that self-efficacy had strong relationships with *Transfer of Knowledge* (r = .47) and moderate relationships with declarative knowledge (r = .30), skill acquisition (r = .32) and job performance (r = .22). In the proposed learning potential structural model it is hypothesised that *Academic Self-efficacy* positively influences *Transfer of*

Knowledge, and subsequently *Learning Performance,* although it is mediated by *Learning Motivation* and *Time Cognitively Engaged*, as is explained above. It is believed that including these mediator variables in the learning potentials structural model will shed light on the cunning logic underlying learning potential in this study.

With regards to hypothesis 13 and 14, according to Bandura (1988) self-efficacy mediates the translation of knowledge and abilities into skilled performance. Self-efficacy is determined, in part, by the individual's assessment of whether his or her abilities and strategies are adequate, inferior, or superior for performance at various task levels and cognitive ability and is, therefore, indirectly related to learning through increased self-efficacy (Gist & Michell, 1992). Colquitt et al. (2000) found that cognitive ability was related to post-training self-efficacy ($r = .22$). It is, therefore, hypothesised that an individual's awareness of their ability, in-terms of *Information Processing Capacity* and *Abstract Reasoning Capacity* will influence their *Academic Self-efficacy*.

Hypothesis 13: In the proposed learning potential structural model it is hypothesised that *Information Processing Capacity* will positively influence *Academic Self-efficacy*.

Hypothesis 14: In the proposed learning potential structural model it is hypothesised that Abstract *Reasoning Capacity* will positively influence *Academic Self-efficacy*.

In addition, with regards to the proposed learning potential structural model, Nunes (2003) investigated the relationship between ability to learn and trainee motivation to learn. A small positive significant correlation was found between the variables ($r = .260$, $p < .05$). This finding suggests that individuals who have sufficient ability to learn should be more motivated to learn (Nunes, 2003) which is in-line with the proposed learning potential structural model although it is mediated by *Academic Self-efficacy*. More specifically, in the proposed learning potential structural model *Information Processing Capacity* and *Abstract Thinking Capacity*, positively influences *Academic Self-efficacy,* whilst *Academic Self-efficacy* positively affects *Learning Motivation*.

2.4.1.6 Expectancy of Learning Performance

According to Baldwin and Ford (1988) research examining motivational issues of transfer of knowledge lacks a coherent framework for understanding factors affecting the transfer process. The expectancy model (Lawler, 1973; Vroom, 1964) provides a useful heuristic for integrating research on motivation that affects transfer of knowledge (C.C Theron, personal communication, 10 July 2011). The expectancy model provides a useful means for understanding transfer of knowledge because of its interactive perspective on motivation as perceptions and motivation are affected by both individual and work-environment factors which must be interpreted by an individual and translated into choices among various behavioural options.

Expectancy, instrumentality and valence are all terms from Vroom's (1964) expectancy theory. This well established theory proposes that an individual's motivation is a product of expectancy, instrumentality and valence and this theory helps to provide insight into individuals' motivations to achieve goals.

More specifically with regards to *Expectancy*, whenever an individual chooses between alternatives which involve uncertain outcomes, his or her behaviour is affected by the degree to which s/he believes these outcomes to be probable. Psychologists have referred to these beliefs as expectancies or subjective probabilities. Expectancy is defined by Vroom (1967) as a momentary belief concerning the likelihood that a particular act will be followed by a particular outcome. Therefore, *Expectancy of Learning Performance* is defined for the purposes of this study as a momentary belief concerning the likelihood that a particular learning act will be followed by a particular learning outcome.

Eden and Ravid (1982) found that higher self-expectancies led to higher training performance. Vancouver and Kendall (2006) have stated that self-efficacy is related to expectancy and the higher an individual's belief that he or she is capable of learning the higher that individual's expectancy of learning performance should be. It

is therefore hypothesised that *Academic Self-efficacy* will positively influence *Expectancy of Learning Performance.*

Hypothesis 15: In the learning potential structural model it is hypothesised that *Academic Self-efficacy* positively influences *Expectancy of Learning Performance*.

In-line with the above it is further hypothesised that *Expectancy of Learning Performance* will positively influence *Learning Motivation*. Anderson (1983) stated that 'one who expects to succeed will be more motivated than one who does not' (p. 1136).

It is therefore further hypothesised;

Hypothesis 16: In the proposed learning potential structural model *Expectancy of Learning Performance* positively influences *Learning Motivation.*

2.4.1.7 Valence of Learning Outcomes

According to Vroom (1967) valence can be defined as affective orientations towards particular outcomes. *Valence of Learning Outcomes* is therefore defined here as affective orientations towards learning outcomes. An outcome has positive valence when an individual prefers attaining it to not attaining it. An outcome has a valence of zero when the person is indifferent to attaining or not attaining it and negative valence occurs when an individual prefers not attaining the outcome to attaining the outcome. Furthermore, valence can take a wide range of both positive and negative values (Vroom, 1967).[24] In essence valence is an affective orientation toward particular outcomes.

[24] It should be noted that the term valence and the term value cannot be used interchangeably. An individual may desire an object but derive little satisfaction from its attainment. Alternatively the individual may avoid an object which he or she then later finds to be quite satisfying. At any given time, there may be a substantial disparency

If the outcome of a performance task has valence for an individual then that individual should be more motivated to perform the task. The higher the valence of the outcome, the more motivated the individual will usually be to perform in a manner that will bring about the outcome. With regards to learning, task valence has been proven to be an effective predictor in a variety of academic outcomes (Multon, Brown, & Lent, 1991). Furthermore, on the basis of expectancy theory (Vroom, 1964), researchers have suggested that valence is related to training success. For example, Baumganel, Reynolds and Paihan (1984) showed that managers who held positive valences of training outcomes were more likely to apply skills learned in training and therefore transfer their knowledge. More specifically, with regards to hypothesis 15 which hypothesised that *Valence of Learning Outcomes* positively influences *Learning Motivation*, Colquitt and Simmering (1998) found that trainees who valued outcomes linked to learning showed increased motivation levels. Colquitt et al. (2000) found that self-efficacy, valence and job involvement explained 46% of the variance in motivation to learn although the unique effect of job involvement was not significant. Colquitt et al. (2000) further found that valence was strongly related to motivation to learn *(r* = .61) and transfer of knowledge *(r* = .70).

It is therefore hypothesised that;

Hypothesis 17: In the proposed learning potential structural model it is hypothesised that *Valence of Learning Outcomes* positively influences *Learning Motivation*.

2.4.1.8 Instrumentality of Learning Outcomes

Whereas *Academic Self-efficacy* is about the perceived likelihood that a particular behaviour will result in a particular outcome, *Instrumentality* is about the perception

---

between the anticipated satisfaction from an outcome (valence) and the actual satisfaction that it provides (value). The strength of an individual's desire for an outcome is not based on the outcomes intrinsic properties but on the *anticipated* satisfaction or dissatisfaction of the outcome.

that an interim outcome will lead to another, important outcome. According to Vroom (1967), instrumentality ranges from positive to negative. Positive instrumentality occurs when the attainment of the second outcome is certain if the first outcome is achieved. Zero instrumentality occurs when there is no likely relationship between the attainment of the first outcome and the attainment of the second. Instrumentality is negative when the attainment of the second outcome is certain without the first and impossible with the first. *Instrumentality of Learning Outcomes,* as used in this study, refers specifically to a goal-directed belief regarding learning, such that attaining a short-term learning goal (e.g., doing well in school) is a necessary step to achieving a long-term learning goal (e.g., being accepted into university).

Although Bandura (1977) argued that proximal goals and appraisals are the key to promoting self–regulation, other researchers have stressed the 'importance of personal future for present motivation and learning' (Simons, Dewitte & Lens, 2000, p. 356). In fact, several researchers have suggested that perceiving a current task as instrumental in attaining one's future goals enhances not only student motivation but also subsequent performance (Eccles & Wigfield, 1995). Without some future orientation, the importance and relevance attached to current tasks would be limited to their short-term appeal (Vick & Packard, 2008; Miller & Brickman, 2004). However, once a distal goal is established, relevant proximal sub-goals are likely to be established and perceived as instrumental. Research has shown a link among the perceived instrumentality of a task and the adoption of mastery goals, course achievement and effort (DeBacker & Nelson, 1999; Greene, DeBacker, Ravindran & Krows, 1999). These findings support earlier research conducted by DeVolder and Lens (1982) which stresses the impact that a future frame of reference can have on present engagement and achievement. In addition, Walker and Greene (2009) also found that learner perceived instrumentality influenced academic achievement. More specifically, Walker and Greene's (2009) results indicated that when learners believe that their current work is instrumental to their future, they are more likely to focus on their development of understanding and simultaneously use cognitive strategies to support their goal.

In support of hypothesis 16, which states that *Instrumentality of Learning Outcomes* positively influences *Learning Motivation,* Noe (1986) stated that individuals will be

more motivated to perform well in training if they perceive that (1) high effort will lead to high performance in training (2) high performance in training will lead will lead to high job performance and (3) high job performance is instrumental in obtaining desired outcomes and avoiding undesirable outcomes. In other words, individuals should be motivated to learn if they perceive that learning will be instrumental to them in obtaining desired outcomes. If an individual feels that an interim outcome will lead to another important outcome that individual should be more motivated.

It is therefore hypothesised that;

Hypothesis 18: In the proposed learning potential structural model it is hypothesised that *Instrumentality of Learning Outcomes* positively influences *Learning Motivation*.

2.4.1.9 Feedback Loops

Taylor (1994) makes an important distinction between learning performance and learning potential. Taylor writes:

> Learning performance is demonstrated when an individual acquires specialized skills through transfer from fairly specialised skills and abilities. The more elaborated and developed a person's skill repertoire, the more effectively and swiftly he or she is likely to acquire the new skill. Learning potential is shown when a person comes to grips with a novel learning task involving unfamiliar stimulus material; in this case previously developed specific skills are of relatively little help to him or her, and the learner has to use very general transfer and skill acquisition strategies. (p. 190)

Learning performance is interpreted as crystallised learning potential. Learning performance is further interpreted as the extent to which an individual has acquired a specific skill, ability or knowledge corresponding to the specific learning situation. In this study, *Learning Performance* refers specifically to the extent to which grade 11 learners achieved academic success within the context of their school learning measures (i.e. test and exam results) in the first semester (terms 1 and 2).

In the learning potential structural model there are two proposed feedback loops. The presence of feedback loops in an explanatory structural model constitutes a formal acknowledgement that the to-be-explained phenomenon is complexly determined. Feedback is considered important in many theories of learning. It provides learners with information that allows them to verify the correctness of the actual response or solution and evaluate the achieved performance level. Reber and Wallin (1984) showed that feedback produced higher levels of skill transfer to the work setting and increased the motivation of the trainees to transfer skills learned in the training.

With regards to the first feedback loop and in support of hypothesis 19 which proposes that *Learning Performance* positively influences *Academic Self-efficacy*, feedback is known to be a persuasive source of self-efficacy information (Gist & Michell, 1992). Feedback that conveys clear information about the learner's skills or progress can raise self-efficacy and subsequent performance. In the model originally proposed by Bandura (1977) self-efficacy is derived from four principal sources of information, namely; performance accomplishments, vicarious experience, verbal persuasion and physiological states.[25] Self-efficacy is therefore developed via several mechanisms, the largest contributors being self-referenced information such as performance accomplishments (Bandura, 1977).[26]

Bandura and Cervone (1986) demonstrated that feedback information, in the form of a discrepancy between performance and a personal standard or goal, can influence self-efficacy. The achievement of difficult goals leads to increased perceptions of self-efficacy (Bandura, 1997) and higher levels of self-efficacy which in turn leads to even higher future performance standards (Bandura, 1997). Bandura (1997) further found that the relation of past performance to subsequent performance is mediated through self-efficacy beliefs, amongst other constructs. Hammond and Feinstein

[25] Although experiences influence efficacy perceptions, it is the individual's cognitive appraisal and integration of these experiences that ultimately determine self-efficacy (Bandura, 1982).

[26] The impact of performance attainments on self-efficacy will vary depending on whether one's accomplishments are ascribed mainly to ability or to effort. Success with minimal effort fosters ability ascriptions that reinforce a strong sense of self-efficacy. In contrast, analogous successes achieved through high expenditure of effort represent a lesser ability and are thus, likely to have a weaker effect on perceived self-efficacy (Bandura, 1977). Furthermore, lack of success or slow progress will not necessarily lower self-efficacy if learners believe they can perform better by expending more effort or using more effective strategies.

(2005) as well as Linnenbrink, Pintrich and Arbor (2003) agree and add that learning performance can raise levels of self-efficacy. The more a student learns and the better they perform, the higher their self-efficacy becomes.

At the outset of an activity, students differ in their self-efficacy for learning as a function of their prior experiences, personal qualities and social supports. As they engage in activities, students are affected by personal influences (e.g., goal setting, information processing) and situational influences (e.g., rewards, feedback) that provide students with cues about how well they are learning. Self-efficacy is enhanced when students perceive they are performing well or becoming more skilful. According to Schunk (1987) performance feedback affects subsequent self-efficacy and the entire process takes place within an ongoing, continuous feedback loop. This idea is supported by Bandura and Schunk (1981) who reported that the more self-instructional mathematical material children mastered, the stronger was their sense of mathematical self-efficacy. They concluded that performance feedback informs learners of goal progress, strengthens self-efficacy and sustains motivation. It is therefore hypothesised that through performing learning tasks successfully, an individuals' *Academic Self-efficacy* will be enhanced.[27]

It is therefore hypothesised that;

Hypothesis 19: In the proposed learning potential structural model it is hypothesised that *Learning Performance* will positively influence *Academic Self-efficacy* as a form of feedback.

It should however be noted that attention to one's performance is not synonymous with accurate assessment of one's capabilities. Individuals often make erroneous judgments of competence that may lead to insufficient allocations of effort and, consequently, deficient performance (Bandura, 1988). Nevertheless, feedback is

[27] It has been argued that self-efficacy is merely a reflection of past performance. Nevertheless studies have shown that perceived self-efficacy is a significant contributor to subsequent performance over and above the influence of other factors, including past performance (Bandura, 1997) and self-efficacy should therefore be considered an antecedent as well as an outcome of training (Gist, 1987).

important for learning. It clarifies person-performance contingencies that may be used in the revision of self-efficacy and provides information for detecting as well as correcting discrepancies between images, actions and outcomes.

The second feedback loop proposed in hypothesis 20, proposes that *Time Cognitively Engaged* will positively influence *Academic Self-efficacy*. Marsh and Yeung (1997) have emphasised the need for further research to evaluate the mediating effects of process variables, such as academic effort, on academic self-efficacy and achievement. Bandura (1977, 1997) wrote that the most influential sources of self-efficacy information are the nature of the student's engagement during learning. The results of Lodewyk and Winnes's (2005) study support the inference that tasks afford students opportunities to generate internal feedback about learning and achievement and that this feedback affects academic self-efficacy (Bandura, 1993; Schunk, 1989, 1991).

It is therefore hypothesised that;

Hypothesis 20: In the proposed learning potential structural model it is hypothesised that *Time Cognitively Engaged* will positively influence *Academic Self-efficacy*.

2.5 THE PROPOSED LEARNING POTENTIAL STRUCTURAL MODEL DEPICTED AS A STRUCTURAL MODEL

The research initiating question, in this study, is the question of why variance in learning performance occurs amongst previously disadvantaged individuals participating in an affirmative development programme? More specifically the research initiating question in this research is how the De Goede (2007) model should be expanded to more closely approximate the psychological process actually determining the level of learning performance achieved by previously disadvantaged trainees in affirmative development programmes. Although this study motivated the need for a structural model that explicates the determinants of learning performance

from the perspective of affirmative development, the value of such a model extends to all forms of formal training and teaching. The assumption underpinning the sampling strategy (see section 3.7) that was used in this study is that the psychological dynamics governing learning performance in affirmative development programmes do not differ substantially from those that govern learning performance in other teaching and training contexts. The assumption is that the same complex nomological network of latent variables that determine learning performance in affirmative development programmes also is at work to determine learning performance of school learners. The level of latent variables will, however, most likely differ across different teaching and training contexts.

The literature study presented a theoretical argument aimed at deriving a convincing answer to the research initiating question. The theoretical position developed through theorising in response to the research initiating question, as presented in the literature study, can be summarised in the form of a structural model and depicted in the form of a path diagram. The expanded learning potential structural model is shown in Figure 2.2. Figure 2.2 in essence represents the over-arching substantive research hypothesis.

Equation 1 expresses the hypothesised expanded learning potential structural model as a matrix equation.

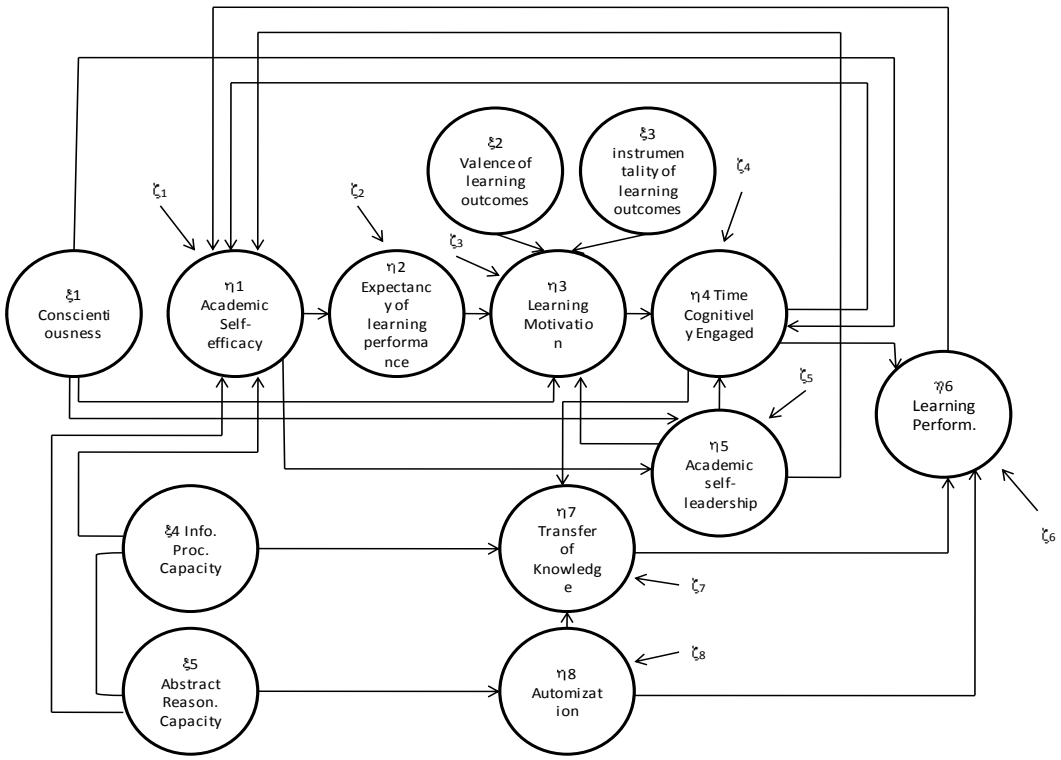

***Figure 2.2*. The hypothesised expanded learning potential structural model.**

$$\begin{pmatrix} \eta_1 \\ \eta_2 \\ \eta_3 \\ \eta_4 \\ \eta_5 \\ \eta_6 \\ \eta_7 \\ \eta_8 \end{pmatrix} = \begin{pmatrix} 0 & 0 & 0 & \beta_{14} & 0 & 0 & 0 & 0 \\ 0 & 0 & \beta_{23} & 0 & 0 & 0 & 0 & 0 \\ 0 & \beta_{32} & 0 & 0 & 0 & 0 & 0 & 0 \\ 0 & 0 & 0 & \beta_{44} & 0 & 0 & 0 & 0 \\ \beta_{51} & 0 & 0 & \beta_{54} & 0 & \beta_{56} & \beta_{57} & 0 \\ 0 & 0 & \beta_{63} & 0 & 0 & 0 & \beta_{67} & 0 \\ 0 & 0 & 0 & 0 & 0 & 0 & 0 & \beta_{78} \\ 0 & 0 & 0 & 0 & 0 & 0 & 0 & 0 \end{pmatrix} \begin{pmatrix} \eta_1 \\ \eta_2 \\ \eta_3 \\ \eta_4 \\ \eta_5 \\ \eta_6 \\ \eta_7 \\ \eta_7 \end{pmatrix} + \begin{pmatrix} \gamma_{11} & 0 & 0 & \gamma_{14} & \gamma_{15} \\ 0 & \gamma_{22} & \gamma_{23} & 0 & 0 \\ 0 & \gamma_{32} & 0 & 0 & 0 \\ \gamma_{41} & 0 & 0 & 0 & 0 \\ 0 & \gamma_{52} & 0 & 0 & 0 \\ 0 & 0 & 0 & \gamma_{64} & 0 \\ 0 & 0 & 0 & 0 & \gamma_{75} \\ 0 & 0 & 0 & 0 & 0 \end{pmatrix} \begin{pmatrix} \\ \xi_1 \\ \xi_2 \\ \xi_3 \\ \xi_4 \\ \xi_5 \\ \\ \end{pmatrix} + \begin{pmatrix} \zeta_1 \\ \zeta_2 \\ \zeta_3 \\ \zeta_4 \\ \zeta_5 \\ \zeta_6 \\ \zeta_7 \\ \zeta_8 \end{pmatrix} \quad \ldots\ldots 1$$

For equation 1 to fully capture the theoretical positioned developed through theorising in response to the research initiating question the Ψ and Φ matrices also need to be defined. The 8x8 variance-covariance matrix Ψ reflecting the variance in and covariance between the structural error terms (ζ_j) is assumed to be a diagonal matrix. The 8 structural error variances ψ_{ii} are therefore freed to be estimated but the (8x7)/2 off-diagonal covariance terms ψ_{ij} are fixed to zero. The structural error terms are therefore assumed to be uncorrelated. The 5x5 variance-covariance matrix Φ reflecting the variance in and covariance between the exogenous latent variables (ξ_i) is assumed to a symmetrical matrix in which all off-diagonal covariance ϕ_{ij} terms are freed to be estimated. The exogenous latent variables are therefore assumed to be correlated. Assuming that the completely standardized

solution will be most meaningful to interpret the 5 exogenous variance terms are fixed to 1 given the fact that the latent variables are standardised. Equation 1 can be reduced to equation 2

$\eta = B\eta + \Gamma\xi + \zeta$---------- 2

CHAPTER 3

RESEARCH METHODOLOGY

3.1 INTRODUCTION

Research has emphasized the importance of studying non-cognitive or non-ability predictors of educational achievement (Chamorro-Premuzic et al., 2006). Whereas ability tests are useful indicators of what a person *can* do and infer maximal performance, non-cognitive factors may provide useful information about what a person *will* do with the focus on typical performance (Cronbach, 1949).

A review of the academic literature shows that learning potential is a function of a myriad of cognitive and non-cognitive variables. It is for this reason that the De Goede (2007) learning potential structural model has been expanded by adding additional non-cognitive variables. The present study intends to test the explanatory structural model shown in Figure 2.2. The validity and credibility of the implicit claim of the study to come to the correct/true verdict on the fit of the structural model, depends on the methodology used to arrive at the verdict. Methodology is meant to serve the epistemic ideal of science. If very little of the methodology used is made explicit, there is no way of evaluating the merits of the researcher's conclusions. The rationality of science thereby suffers, as does ultimately the epistemic ideal of science (Babbie & Mouton, 2001). A comprehensive description and thorough motivation of how the methodology was approached allows knowledgeable peers to identify methodological flaws and to point out the implication of these for the validity of the conclusions. The methodology to be used, as well the measurement instruments, will be discussed in the following sections.

3.2 REDUCED LEARNING POTENTIAL STRUCTURAL MODEL

Empirically testing the learning potential structural model developed through theorizing, in response to the research initiating question depicted in Figure 2.2, will present major practical challenges. Most serious of these is the time research participants will have to invest to complete the battery of instruments measuring the latent variables comprising the current structural model. The APIL-B alone (measuring the latent variables *transfer of knowledge, automatization, abstract thinking capacity* and *information processing capacity*) requires approximately 3.5 hours to complete (Taylor, 2006). Another reason for empirically testing the reduced learning potential structural model (Figure 3.1) is that due to the complexity of the learning potential structural model (Figure 2.2) and the subsequently large sample size that would be required, which would be impractical for a study of this scope.

It consequently was decided to subject only a subset of the learning potential structural model proposed in Figure 2.2 to empirical testing. The reduced structural model is shown in Figure 3.1.[28]

Equation 3 expresses the hypothesised reduced learning potential structural model as a matrix equation.

$$\begin{pmatrix} \eta_1 \\ \eta_2 \\ \eta_3 \\ \eta_4 \\ \eta_5 \end{pmatrix} = \begin{pmatrix} 0 & 0 & 0 & \beta_{14} & \beta_{15} \\ \beta_{21} & 0 & 0 & \beta_{24} & 0 \\ \beta_{31} & \beta_{32} & 0 & \beta_{34} & 0 \\ \beta_{41} & \beta_{42} & 0 & 0 & 0 \\ 0 & 0 & \beta_{53} & 0 & 0 \end{pmatrix} \begin{pmatrix} \eta_1 \\ \eta_2 \\ \eta_3 \\ \eta_4 \\ \eta_5 \end{pmatrix} + \begin{pmatrix} 0 \\ \gamma_{21} \\ \gamma_{31} \\ \gamma_{41} \\ 0 \end{pmatrix} \begin{pmatrix} \xi_1 \end{pmatrix} + \begin{pmatrix} \zeta_1 \\ \zeta_2 \\ \zeta_3 \\ \zeta_4 \\ \zeta_5 \end{pmatrix} \cdots\cdots\cdots$$

28 The reduced learning potential structural model includes the newly added variables that were introduced in the literature review, in chapter 2, excluding *Expectancy of Learning Performance, Valence of Learning Outcomes and Instrumentality of Learning Outcomes*. These three variables as well as the De Goede (2007) portion of the learning potential structural model were not empirically tested mainly due to the time research participants will have to invest to complete the battery of instruments measuring the latent variables comprising the current structural model.

The 5x5 variance-covariance matrix Ψ reflecting the variance in and covariance between the structural error terms (ζ_j) is again assumed to be a diagonal matrix.

Equation 3 can be reduced to equation 4

$\eta = B\eta + \Gamma\xi + \zeta$ ---------- 4

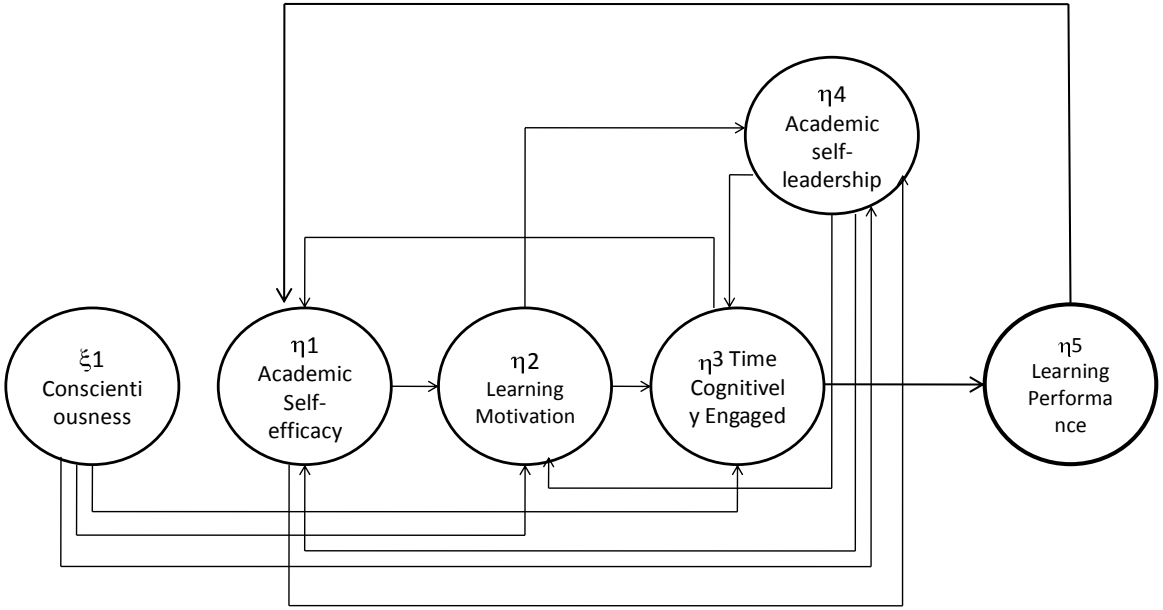

***Figure 3.1*. Hypothesised reduced learning potential structural model**

3.3 SUBSTANTIVE RESEARCH HYPOTHESES

The objective of this study is to elaborate the learning potential structural model proposed by De Goede (2007). The theoretical argument presented in the literature study resulted in the inclusion of additional non-cognitive learning competency latent variables to the original model. The resultant elaborated structural model was depicted in Figure 2.2. The expanded structural model was subsequently reduced (see Figure 3.1) in the interest of practical expediency. The over-arching substantive hypothesis of this study (hypothesis 1) is that the structural model depicted in Figure 3.1 provides a valid account of the psychological process that determines the level of learning achieved by trainees in an affirmative development programme.[29] The over-arching substantive research hypothesis can be dissected into the following more detailed, specific direct effect substantive research hypotheses.[30]

Hypothesis 2: In the proposed learning potential structural model it is hypothesised that *Time Cognitive Engagement* positively influences *Learning Performance*.

Hypothesis 3: In the proposed learning potential structural model it is hypothesised that *Conscientiousness* will positively influence *Time Cognitively Engaged*.

Hypothesis 4: In the proposed earning potential structural model it is hypothesised that *Learning Motivation* will positively influence *Time Cognitively Engaged*.

Hypothesis 5: In the proposed learning potential structural model it is hypothesised that *Conscientiousness* will positively influence *Learning Motivation*.

Hypothesis 6: In the proposed learning potential structural model it is hypothesised that *Academic Self-leadership* will positively influence *Learning Motivation*.

---

[29] As mentioned, although this study motivated the need for a structural model that explicates the determinants of learning performance from the perspective of affirmative development, the value of such a model extends to all forms of formal training and teaching. The assumption underpinning the sampling strategy (see section 3.7) that was used in this study is that the psychological dynamics governing learning performance in affirmative development programmes do not differ substantially from those that govern learning performance in other teaching and training contexts. The assumption is that the same complex nomological network of latent variables that determine learning performance in affirmative development programmes also is at work to determine learning performance of school learners. The level of latent variables will, however, most likely differ across different teaching and training contexts.

[30] Indirect effect substantive hypotheses in which mediator variables mediate the effect of ξ_i on η_j or the effect of η_i on η_j are not formally stated. Neither will formal statistical hypotheses be formulated for these effects. The significance of the indirect effects will nonetheless be tested.

Hypothesis 7: In the proposed learning potential structural model it is hypothesised that *Learning Motivation* positively influences *Academic Self-leadership.*

Hypothesis 8: In the proposed learning potential structural model it is hypothesised that *Academic Self-leadership* will positively influence *Time Cognitively Engaged*.

Hypothesis 9: In the proposed learning potential structural model it is hypothesised that *Academic Self-leadership* positively influences *Academic Self-efficacy*.

Hypothesis 10: In the proposed learning potential structural model it is hypothesised that *Academic Self-efficacy* positively influences *Academic Self-leadership*.

Hypothesis 11: In the learning potential structural model it is hypothesised that *Conscientiousness* positively influences *Academic Self-leadership*.

Hypothesis 12: In the learning potential structural model it is hypothesised that *Time Cognitively Engaged* positively influences *Academic Self-efficacy*.

Hypothesis 13: In the learning potential structural model it is hypothesised that *Academic Self-efficacy* positively influences *Learning Motivation*.

Hypothesis 14: In the learning potential structural model it is hypothesised that *Learning performance* positively influences *Academic Self-efficacy*.

3.4 RESEARCH DESIGN

To empirically investigate the overarching substantive hypothesis, as well as the array of specific direct effect substantive research hypotheses, a strategy is required that will provide unambiguous, empirical evidence in terms of which to evaluate the operational hypothesis.

The research design is the plan and structure of the investigation which is set up to firstly, procure answers to the research question and secondly, to control variance (Kerlinger, 1973). The ability of the research design to maximise systematic variance, minimise error variance and control extraneous variance (Kerlinger, 1973; Kerlinger & Lee, 2000) will ultimately determine the unambiguousness of the empirical evidence. An *ex post facto* correlation design will be used in this study. According to Kerlinger and Lee (2000), *ex post facto* research is a systematic empirical inquiry in which the researcher does not have direct control of independent

variables as their manifestations have already occurred or because they inherently cannot be manipulated. Experimental manipulation and random assignment are not possible in *ex post facto* research. The aim is to discover what happens to one variable when the other variables change. Inferences about the hypothesized relation existing between the latent variables ξ and η are made from concomitant variation in independent and dependent variables (Kerlinger & Lee, 2000). The *ex post facto* nature of the research design, however, prevents the drawing of casual inferences from significant path coefficients as correlations do not imply causation.

In terms of the logic of the *ex post facto* correlation design, measures of the observed variables are obtained and the observed covariance matrix is calculated. Estimates for the freed structural and measurement model parameters are obtained in an iterative fashion with the objective of reproducing the observed covariance matrix as closely as possible (Diamantopoulos & Siguaw, 2000). If the fitted model fails to accurately reproduce the observed covariance matrix (Diamantopoulos & Siguaw, 2000; Kelloway, 1998) it means that the fitted model does not provide an acceptable explanation for the observed covariance matrix. It then follows that the structural relationships hypothesized by the model do not provide an accurate portrayal of the psychological process shaping learning performance.[31] The opposite, however, is not true. If the covariance matrix derived from the estimated structural and measurement model parameters closely agrees with the observed covariance matrix, it would not imply that the psychological dynamics postulated by the structural model necessarily produced the observed covariance matrix. It can therefore not be concluded that the psychological process depicted in the model necessarily must have produced the levels of learning performance observed in the learners sampled for the study. A high degree of fit between the observed and estimated covariance matrices would only imply that the psychological processes portrayed in the structural model provide one plausible explanation for the observed covariance matrix.

[31] This conclusion, however, would only be warranted if prior evidence would exist that the measurement model fits closely.

Ex post facto research has three major interrelated limitations, namely; the inability to manipulate the independent variables, the lack of power to randomise and the risk of improper interpretation. When compared to experimental designs, *ex post facto* research lacks control and erroneous interpretations may originate due to the possibility of more than one explanation for the obtained difference or correlation (Kerlinger & Lee, 2000). This is especially risky when there are no clearly formulated hypotheses, which is, however, not true for this study. The value of *ex post facto* design lies in the fact that most research in the social sciences does not lend itself to experimentation. A certain degree of controlled inquiry may be possible, but experimentation is not, thus making an *ex post facto* design valuable in this regard (Kerlinger & Lee, 2000).

The argument presented throughout the literature study resulted in series of hypotheses that reflect the manner in which the dimensions of learning potential are expected to influence learning performance. The *ex post facto* nature of the research design, however, will preclude the drawing of causal inferences from significant correlation coefficients.

3.5 STATISTICAL HYPOTHESES

The format in which the statistical hypotheses are formulated depends on the logic underlying the proposed research design, as well as the nature of the envisaged statistical analyses. The proposed learning potential structural model contains a number of endogenous latent variables and the model proposes causal paths between these endogenous latent variables. Structural equation modelling offers the only possibility of testing the proposed structural model as an integrated, complex hypothesis. The use of multiple regression to test the proposed paths will require that the model be dissected into as many sub-models, as there are endogenous latent variables, and dissecting the model will invariably result in a loss of meaning. The explanation as to why learners vary in the level of learning performance they achieve is not located in any specific point in the structural model but rather is contained in the whole network of relationships between the latent variables.

The notational system used in the formulation of the statistical hypotheses follows the structural equation modelling convention associated with LISREL (Du Toit & Du Toit, 2001).

In estimating the hypothesised model's fit the extent to which the model is consistent with the obtained empirical data will be tested. In order to investigate a hypothesised model's fit, an exact fit null hypothesis and a close fit null hypothesis will be tested (Diamantopoulos & Siguaw, 2000).

The overarching substantive research hypothesis states that the structural model depicted in Figure 3.1 provides a valid account of the psychological process that determines learning performance of school learners. If the overarching substantive research hypothesis would be interpreted to mean that the structural model provides a perfect account of the psychological dynamics underlying learning performance, the substantive research hypothesis translates into the following exact fit null hypothesis:

exact fit: RMSEA = 0[32]

exact fit: RMSEA > 0

However, the possibility of exact fit is highly improbable in that structural models are only approximations of reality and, therefore, rarely exactly fit in the population. The close fit null hypothesis takes the error of approximation into account and is therefore more realistic (Diamantopoulos & Siguaw, 2000). If the error, due to approximation in the population, is equal to or less than .05 the model can be said to fit closely (Diamantopoulos & Siguaw, 2000). If the overarching substantive research hypothesis would be interpreted to mean that the structural model provides an approximate account of the psychological dynamics underlying learning performance, the substantive research hypothesis therefore translates into the following close fit null hypothesis:

close fit: RMSEA ≤ 0.05

close fit: RMSEA > 0.05

[32] The subscript numbering of the statistical hypotheses reflects the fact that exact and close fit null hypotheses will also be tested with regards to the measurement model to evaluate the success with which the latent variables in the structural model have been operationalised.

In addition to the overall fit hypotheses, the following path coefficient hypotheses will be formulated and tested if the model fits the data reasonably well:

Hypothesis 2: In the proposed learning potential structural model it is hypothesised that *Time Cognitively Engaged* positively influences *Learning Performance*.

H_{03}:$\beta_{53} = 0$

H_{a3}:$\gamma_{53} > 0$

Hypothesis 3: In the proposed learning potential structural model it is hypothesised that *Conscientiousness* will positively influence *Time Cognitively Engaged*.

H_{04}:$\gamma_{31} = 0$

H_{a4}:$\gamma_{31} > 0$

Hypothesis 4: In the proposed earning potential structural model it is hypothesised that *Learning Motivation* will positively influence *Time Cognitively Engaged.*

H_{05}:$\beta_{32} = 0$

H_{a5}:$\beta_{32} > 0$

Hypothesis 5: In the proposed learning potential structural model it is hypothesised that *Conscientiousness* will positively influence *Learning Motivation*.

H_{06}:$\gamma_{21} = 0$

H_{a6}:$\gamma_{21} > 0$

Hypothesis 6: In the proposed learning potential structural model it is hypothesised that *Academic Self-leadership* will positively influence *Learning Motivation*.

H_{07}: $\beta_{24} = 0$

H_{a7}: $\beta_{24} > 0$

Hypothesis 7: In the proposed learning potential structural model it is hypothesised that *Learning Motivation* positively influences *Academic self-leadership.*

H_{08}: $\beta_{42} = 0$

H_{a8}: $\beta_{42} > 0$

Hypothesis 8: In the proposed learning potential structural model it is hypothesised that *Academic Self-leadership* will positively influence *Time Cognitively Engaged.*

H_{09}: $\beta_{34} = 0$

H_{a9}: $\beta_{34} > 0$

Hypothesis 9: In the proposed learning potential structural model it is hypothesised that *Academic Self-leadership* positively influences *Academic Self-efficacy*.

H_{010}:$\beta_{14} = 0$

H_{a10}:$\beta_{14} > 0$

Hypothesis 10: In the proposed learning potential structural model it is hypothesised that *Academic Self-efficacy* positively influences *Academic Self-leadership*.

H_{011}:$\beta_{41} = 0$

H_{a11}:$\beta_{41} > 0$

Hypothesis 11: In the learning potential structural model it is hypothesised that *Conscientiousness* positively influences *Academic Self-leadership*.

H_{012}: $\gamma_{41} = 0$

H_{a12}: $\gamma_{41} > 0$

Hypothesis 12: In the learning potential structural model it is hypothesised that *Time Cognitively Engaged* positively influences *Academic Self-efficacy*.

H_{013}:$\beta_{13} = 0$

H_{a13}:$\beta_{13} > 0$

Hypothesis 13: In the learning potential structural model it is hypothesised that *Academic Self-efficacy* positively influences *Learning Motivation*.

H_{014}:$\beta_{21} = 0$

H_{a14}:$\beta_{21} > 0$

Hypothesis 14: In the learning potential structural model it is hypothesised that *Learning performance* positively influences *Academic Self-efficacy*.

H_{015}:β_{15} = 0

H_{a15}:β_{15} > 0

3.6 MEASURING INSTRUMENTS/OPERATIONALIZATION

The ability to evaluate the fit of the learning potential structural model is contingent on the availability of the measures of the learning competency potential latent variables. To obtain empirical proof that the relationships postulated by the proposed learning potential structural model offer a plausible explanation for differences observed in learning performance, measures of the various exogenous and endogenous latent variables compromising the model are needed. To deduce valid and credible conclusions of the ability of the proposed learning potential structural model to explain variance in learning performance, evidence is needed that the manifest indicators are indeed valid and reliable measures of the latent variables they are linked to. Diamantopoulos and Siguaw (2000) clarify:

> Clearly, unless we can trust the quality of our measurements, then any assessment of the substantive relations of interest will be problematic (p. 89).

Part of the evidence needed to establish the psychometric integrity of the indicator variables, used to operationalize the latent variables comprising the proposed learning potential structural model, is presented below. Research evidence available in the literature on the reliability and validity of the selected measuring instruments is presented to justify the choice of existing measuring instruments. The success with which the indicator variables represent the latent variables comprising the learning potential structural model in this specific study was in addition evaluated empirically via item analysis, exploratory factor analysis (EFA) and confirmatory factor analysis (CFA). Item analysis was performed to determine to what extent the items all reflect a common underlying latent variable and all sensitively differentiate between different states of the latent variable. Poor items were considered for deletion, or revised. EFA was used to examine the unidimensionality assumption. CFA was used

to evaluate the degree to which the design intention underlying the operationalization of the latent variables contained in the reduced structural model succeeded.

A Learning Potential Questionnaire (LPQ) was constructed from the various scales described below that were chosen to measure the latent variables comprising the reduced structural model (Figure 3.1). The LPQ is shown in Appendix A.

3.6.1 Time Cognitively Engaged

Learners need to think deeply, critically and creatively about the material to be learned (Linnenbrink et al., 2003). As learners become engaged with the material at a deeper level, they are more likely to come to understand it better, which most teachers take as a better indicator of learning than just simple memory of the material.

The Academic Engagement Scale for Grade School Students (AES-GS) constructed by Tinio (2009) was adapted and used to measure *Time Cognitively Engaged*. According to Tinio (2009) engagement is associated with how much the student invests in his education and the AES-GS was devised to measure the level of engagement of a learner in his or her education. Tinio (2009) administered the AES-GS to 250 sixth and seventh graders. Data was analyzed and the results indicated a Cronbach Alpha of .89.

A time component was also included in the *Time Cognitively Engaged* scale in order to measure the 'quantity' aspect of *Time Cognitively Engaged* and not only the 'quality' aspect of the construct. The scale, therefore, not only measures whether the learner is engaged cognitively with his or her study material but also whether the learner believes s/he spent enough time cognitively engaged with his or her learning tasks. Items pertaining to the time the learner spent cognitively engaged were included to see whether the learner set aside enough time, as well as made use of the time set aside in order to learn the study material.

Two item parcels were calculated by taking the mean of the even and uneven numbered items of the *Time Cognitively Engaged* scale to form two composite indicator variables for the *Time Cognitively Engaged* latent variable in the structural model.

3.6.2 Conscientiousness

In this study the Alphabetical Index of 204 Labels for 269 International Personality Item Pool IPIP Scales (retrieved May 28, 2011 from http://ipip.ori.org/newNEOKey.htm#Conscientiousness) was used. The IPIP is freely available in the public domain Goldberg (as cited in Mervielde, Deary, DeFruyt & Ostendorf, 1999) and is relatively short. The revised versions of the scales are almost 20% shorter than the original. It is based on the revised version of the NEO Personality Inventory (NEO-PI-R) developed by Costa and McCrae (1992) and contains 20 items.

The IPIP was proposed by Goldberg (as cited in Mervielde, et al., 1999) as a scientific collaborator for the development of advanced measures of personality traits and other individual differences. Over the years, the IPIP website (http://ipip.ori.org/) has provided an ever increasing set of measures, all in the public domain, available to scientists worldwide. According to Buchanan, Johnson and Goldberg (2005) the scales have proven to be useful tools in a number of applied fields. The scales in the IPIP have been shown to correlate highly with the corresponding NEO-PI-R domain scores, with correlations that range from .85 to .92 when corrected for unreliability (International Personality Item Pool, 2001). The IPIP scales also out-performed the NEO-PI-R versions of the same constructs as predictors of a number of clusters of self-report behavioural acts, although these findings come from the same sample as was used to construct the IPIP scales. Buchanan et al. (2005) stated that the IPIP inventory that they evaluated appeared to have satisfactory psychometric properties as a brief online measure of the domain constructs of the Five-Factor Model. Goldberg (as cited in Mervielde, et al., 1999) in-line with this concluded his study

with favourable evidence regarding the relaibility and predictive utility of the IPIP. More specifically the NEO IPIP received a Cronbach Alpha of .80.

This 20 item scale appeared to define Conscientiousness as constitutively defined in this study although some items were deleted and others adapted. Research on the Conscientiousness scale has obtained a Cronbach's alpha of 0.90 (see http://ipip.ori.org/newNEOKey.htm#Conscientiousness).

Two item parcels were calculated by taking the mean of the even and uneven numbered items of the *Conscientiousness* scale to form two composite indicator variables for the *Conscientiousness* latent variable in the structural model.

3.6.3 Learning Motivation

Nunes (2003) developed a combined questionnaire to measure trainee motivation to learn and intention to learn. The motivation to learn questionnaire (MLQ) was divided into three sections. Section B (Motivation to Learn) provides an assessment of learning motivation defined as the specific desire to learn the content of the training programme. This motivation to learn section of the questionnaire was used (in a slightly revised format) in the present study. Analysis performed by Nunes (2003) on her motivation to learn scale with 20 items revealed a Cronbach Alpha of .94 with N = 114.

Two item parcels were calculated by taking the mean of the even and uneven numbered items of the *Learning Motivation* scale to form two composite indicator variables for the *Learning Motivation* latent variable in the structural model.

3.6.4 Academic Self-leadership

Self-leadership was measured by adapting the Revised Self-Leadership Questionnaire (RSLQ) developed by Houghton and Neck (2002). According to Norris (2008), the RSLQ items load on three second-order factors. The RSLQ measures self-leadership behaviours manifested in these three core strategies (namely; *behaviour-focused strategies,* for example 'I establish specific goals for my own efforts'; *natural reward-focused strategies,* for example 'I found my own favorite way to get things done'; and *constructive thought-focused strategies,* for example 'I think about and evaluate the beliefs and assumptions I hold'). The RSLQ comprises nine first-order self-leadership factors namely: self-goal setting; self-reward; self-punishment; self-observation; self-cueing; natural rewards; visualising successful performance; self-talk and evaluating belief and assumptions as were discussed in the literature review in the self-leadership section. The reliabilities of the nine underlying subscales range from .74 to .93. Norris (2008) reported Cronbach Alphas coefficients of .88 for the behaviour focused subscale, .78 for the natural reward subscale, .88 for the constructive thought subscale and .93 for general self-leadership scale.

In adapting the scale some items were deleted and all the items were adapted. In addition items 6, 15, 24 and 30 from the self-punishment scale were excluded from the self-punishment scale as advised by Jeffery Houghton (J. Houghton, personal communication, 18 February 2011).

Two item parcels were calculated by taking the mean of the even and uneven numbered items of the *Academic Self-leadership* scale to form two composite indicator variables for the *Academic Self-leadership* latent variable in the structural model.

3.6.5 Academic Self-efficacy

Self-efficacy differs operationally from other self-related constructs in that self-efficacy items are phrased in terms of what individuals *can do* rather than what they *will do* or *usually do* in a particular domain. Self-efficacy beliefs revolve around questions of 'can' and the answers to self-efficacy questions that individuals pose to themselves reveal their confidence in their ability to accomplish the task.

Academic Self-efficacy, as used in this study, refers to beliefs about one's capability to learn or perform academic tasks effectively. The operalisation of *Academic Self-efficacy* is, therefore, aimed to gain information about the learners' self-efficacy beliefs that relate to academic/learning success. In order to achieve this, academic self efficacy items were taken and adapted from the Morgan-Jinks Student Efficacy Scale, (MJSES), the Self-Efficacy for Learning Form (SELF) questionnaire as well the scale developed by Vick and Packard (2008).

With regards to the MJSES, this scale has proved useful in a number of formal research settings, including master's theses and doctoral dissertations. 'The MJSES was designed to gain information about student efficacy beliefs that might relate to school success' (Jinks & Morgan, 1999, p.226). Factor analysis on the MJSES has revealed that three major factors operate within the scale, namely; talent items; context items and effort items. In this study the context and effort scale were omitted as they were not relevant to the current investigation and only the talent items were used and adapted. The Cronbach Alpha for the talent sub-scale was .78 (Jinks & Morgan, 1999). Self-reported grades is a dependent variable included in the MJSES scale and items pertaining to this were also excluded from the *Academic Self-efficacy* scale as actual performance information (school marks) were used in this study.

Zimmerman and Kitsantas (2007) developed a scale to assess self-efficacy for self-regulated learning (SRL), termed the Self-Efficacy for Learning Form (SELF). Zimmerman and Kitsantas (2007) constructed the SELF to capture students' certainty about coping with challenging academic problems or contexts. In their study, Zimmerman and Kitsantas (2007) examined the psychometric properties of

scores on the SELF with a sample of high school girls. The SELF, which comprised of 57 items, was found to have a unitary factorial structure. In addition, the scale obtained a Cronbach's Alpha of .96 and a high level of validity in predicting students' college-reported grade point average, GPA, (r = .68). The SELF was made use of in the construction of the *Academic Self-efficacy* scale in this study and items from this scale were included and adapted.

Lastly, Vick and Packard (2008) adapted the Self-Efficacy subscale of the MSLQ in order to measure learner's academic self-efficacy. The Self-Efficacy subscale consisted of 9 items measured on a 7-point scale ranging from 1 (*not at all true of me*) to 7 (*very true of me*). Vick and Packard's (2008) scale obtained a Cronbach's Alpha of .90 and was subsequently also used in the construction of the *Academic Self-efficacy* scale in this study.

Two item parcels were calculated by taking the mean of the even and uneven numbered items of the *Academic Self-efficacy* scale to form two composite indicator variables for the *Academic Self-efficacy* latent variable in the structural model.

3.6.6 Learning Performance

Learning Performance was represented through the learners' grade 11 first semester (term 1 and 2) academic results. More specifically, all the learners from the four schools included in this study had the subjects English, Afrikaans and Mathematics and therefore marks for these subjects were used to represent *Learning Performance*.[33] Each of these subject's marks from term one and two were added together and divided by two to obtain an average mark. It was felt that not only taking the two terms but also the variety of the subjects chosen, in terms of mathematics

[33] Initially it was decided to take learners' first and second term marks, add them all together and divide by the number of subjects that that learner had (taking into account extra credit for learners who had more than the required amount of subjects and subjects that were higher grade as opposed to standard grade). Unfortunately the measurement model in which *Learning Performance* was represented by two aggregate term marks failed to converge. It was then decided to take the learners English, Afrikaans and Mathematics first and second term marks (as these three subjects were taken by all learners in all four schools) therefore having six aggregate term marks for each learner. After doing this the measurement model converged.

and languages, the marks served as a representative indicator of the learners' *Learning Performance*.

The average marks obtained over the two terms of the first semester for English, Afrikaans and Mathematics were, therefore, used to represent the *Learning Performance* latent variable in the learning potential structural model.

3.7 RESEARCH PARTICIPANTS

The units of analysis for this study were grade 11 learners, who had completed their first semester (term 1 and 2) of grade 11. A number of schools in the Western Cape region were approached and those willing to participate were included in the study. Four high schools in the Western Cape were included in the study. The four schools represent a nonprobability, convenience sample from all schools in the Western Cape resorting under the Western Cape Department of Education (DOE). Permission from the Western Cape DOE was obtained as well as from the principals of the four included schools. Informed consent was obtained from parents and informed assent from learners. Learners were not obligated to fill in the questionnaire and this was communicated to them. Those grade 11 learners, from the four included schools, who had a parental consent form and signed the assent form, were included in the study.

3.7.1 Sampling

The extent to which observations can, or may be generalised, to the target population is a function of the number of subjects in the chosen sample, as well as the representativeness of the sample, while the power of inferential statistics tests also depends on sample size (De Goede & Theron, 2010). The target population for this study is all South African learners. Drawing a representative sample from this target population clearly presents formidable logistical challenges. Although this study motivated the need for a structural model that explicates the determinants of

learning performance from the perspective of affirmative development, the value of such a model extends to all forms of formal training and teaching. The assumption underpinning the sampling strategy that was used in this study is that the psychological dynamics governing learning performance in affirmative development programmes do not differ substantially from those that govern learning performance in other teaching and training contexts. The assumption is that the same complex nomological network of latent variables that determine learning performance in affirmative development programmes also is at work to determine learning performance of learners in grade 11. The level of latent variables will, however, most likely differ across different teaching and training contexts. This line of reasoning warrants the empirical evaluation of the structural model on a sample of non-previously disadvantaged learners as well as previously disadvantaged learners who have been enrolled for a teaching/training programme that does not qualify as affirmative development.

In this study, non-probability sampling, more specifically convenience sampling, was used. It therefore cannot be claimed that the sample is representative of the target population or even the sampling population (schools in the Western Cape resorting under the Western Cape Department of Education). Replicating the findings of this research across qualitatively different learner samples from the target population should be considered essential.

Sample sizes of 200 observations or more appears to be satisfactory for most SEM applications (Kelloway, 1998). Three issues are relevant when deciding on the appropriate sample size for a study that intends using SEM. The first consideration is the ratio of sample size to the number of parameters to be estimated. A situation, in which more freed model parameters have to be estimated than there are observations in the sample, would not be regarded as acceptable. Elaborate measurement and structural models which contain more variables and have more freed parameters that have to be estimated, require larger sample sizes. Bentler and Chou (as cited in Kelloway, 1998, p. 20) recommend that the ratio of sample size to number of parameter estimated should fall between 5:1 and 10:1. The proposed structural model (Figure 3.1) and the proposed procedure for operationalizing the latent variables (see paragraph 3.6) would in terms of the Bentler and Chou (as cited

in Kelloway's, 1998) guideline require a sample of 215 - 430 research participants to provide a convincing test of the proposed learning potential structural model (43 freed parameters).

The statistical power associated with the test of the hypothesis of close fit (H_0: RMSEA $\leq$ .05) against the alternative hypothesis of mediocre fit (H_a: RMSEA > 0.05) is a second consideration to take into account when deciding on the appropriate sample size. Statistical power in the context of SEM refers to the probability of rejecting the null hypothesis of close fit (H_0: RMSEA ≤ 0.05) when in fact it should be rejected (i.e., the model fit actually is mediocre, H_a: RMSEA > 0.05). Excessively high statistical power would mean that any attempt to formally empirically corroborate the validity of the model would be futile. Even a small deviation from close fit would result in a rejection of the close fit null hypothesis. Excessively low power on the other hand would mean that even if the model fails to fit closely, the close fit null hypothesis would still not be rejected. Not rejecting the close fit under conditions of low power will therefore not provide very convincing evidence on the validity of the model. Power tables were compiled by MacCallum, Browne and Sugawara (1996). These tables were used to derive sample size estimates for the test of close fit, given the effect sizes assumed above, a significance level (α) of .05, a power level of .80 and degrees of freedom (v) of (½[(p+q][p+q+1]-t)=91-43=48. The MacCallum et al. (1996) table indicates that a sample of 214 observations would be required to ensure statistical power of .80 in testing the null hypothesis of close fit for the elaborated learning potential structural model.

The third aspect that needs to be taken into account when deciding on the appropriate sample size is practical and logistical considerations like cost, availability of suitable respondents and the willingness of the employer (or school in this case) to commit large numbers of employees (i.e. learners) to the research. Taking all three the above considerations into account it is suggested that a sample of 200 – 250 research participants should be selected for the purpose of testing the proposed learning potential structural model.

Any grade 11 learner who had completed their grade 11 first semester (i.e., term 1 and 2) at the school they were at that time registered with, could be included in the sample. Institutional permission was obtained from the Western Cape DOE and the principals from each school that participated in the study. Informed consent was further obtained from the parents of the grade 11 learners as well as assent from the learners who participated in the study.

Table 3.1

Profile of the sample of grade 11 learners

School		
School	**Frequency**	**Percent**
School 1	143	31.1
School 2	97	21.1
School 3	46	10.0
School 4	173[34]	37.6
Age		
Minimum and maximum	**Mean**	**Standard deviation**
16; 21	16.96	0.720
Gender		
Variable	**Frequency**	**Percentage**
Male	275	59.8
Female	185	40.2
Home Language		
Variable	**Frequency**	**Percent**
English	296	64.3
Afrikaans	136	29.6
Xhosa	28	6.1

As can be seen in Table 3.1 the sample was made up of 460 grade 11 learners from four different schools in the Western Cape area. The first two schools, schools 1 and 2, were predominantly Black schools and schools 3 and 4 were predominantly White schools. The sample, therefore, provided an almost 50/50 split between Black and White learners.

With regards to the age of the grade 11 learners, as can be seen in Table 3.1, the mean age was 16.96 and that standard deviation .720, with the youngest learners aged 16 and the oldest learner being 21 years of age.

[34] The variable had one missing value

With regards to gender, there were more males than females in the sample. As can be seen in Table 3.1 the sample consists of 59.8 percent male and 40.2 percent female respondents.

Furthermore, it is evident from Table 3.1 that the majority, 64.3 percent, of the learners' home language was English. Twenty-nine point six percent of the learners' reported Afrikaans to be their home language, whilst a small percentage (6.1%) indicated Xhosa as their home language.

3.8 MISSING VALUES

Missing values can potentially present a problem that would have to be solved before the composite indicator variables could be calculated and the data analysed. Calculating the composite indicator variables without appropriately treating the problem of missing values can result in seemingly adequate, but in reality deficient, indicator variables. Various options exist to treat the problem of missing values. Imputation by matching was used to solve the missing value problem in this study. The choice of procedure is motivated in section 4.1.

3.9 DATA ANALYSIS

Item analysis, exploratory factor analysis (EFA) and structural equation modelling (SEM) was used to analyse the data obtained on the various instruments and to test the proposed learning potential structural model as depicted in Figure 3.1.

3.9.1 Item Analysis

The various scales (see section 3.6) used to measure the latent variables comprising the structural model depicted in Figure 3.1 were developed with the specific intention to measure a specific latent variable, or dimension of a latent variable, carrying a

specific constitutive definition. Items were written to indicate the standing of respondents on these specific latent variables. The items were developed to serve as stimuli to which the respondents would react with observable behaviour that is deemed to be a relatively uncontaminated expression of the specific underlying latent variable.

Item analysis was consequently conducted in order to determine the internal consistency of the items of the measuring instruments. The objective of item analysis was to identify items that did not successfully reflect the intended latent variable.[35] Poor items were regarded as items that failed to discriminate between different levels of the latent variable they were designed to reflect. Poor items did not, in conjunction with their subscale counterparts, reflect a common latent variable. Poor items were further identified based on a basket of psychometric evidence and a decision whether they should be deleted from the scale or not was based on the available evidence. The basket of evidence included, amongst others, the following classical measurement theory item statistics: the item-total correlation, the squared multiple correlation, the change in subscale reliability when the item would be deleted, the change in subscale variance if the item would be deleted, the inter-item correlations and the item mean and the item standard deviation.

Item analysis was performed on the data after the treatment of missing values. PASW version 19 (SPSS, 2011) was used to perform the item analyses.

3.9.2 Exploratory Factor Analysis

The architecture of each of the scales and subscales used to measure the latent variables comprising the proposed learning potential structural model reflect the intention to construct *essentially* one-dimensional sets of items. These items were

[35] Neither the item analyses nor the EFA of the various scales can, however, provide sufficient evidence to permit a conclusive verdict on the success with which the specific latent variable, as constitutively defined, is measured. To obtain more conclusive evidence on the construct validity of the various scales the measurement models mapping the items on the latent variables will have to be elaborated into fully fledged structural models that also map the latent variables onto outcome latent variables in accordance with the directives of the constitutive definitions of the latent variables.

meant to operate as stimuli to which test respondents react with observable behaviour that is primarily an expression of a specific unidimensional latent variable. The behavioural response to each item will however never only be a reflection of the latent variable of interest but will be also be influenced by a number of other latent variables and random error influences that are not relevant to the measurement objective (Guion, 1998). The non-relevant latent variables that influence a respondent's reaction to item *i* do not, however, operate to affect respondent's reaction to item *j*. The assumption is that only the relevant latent variable is a common source of variance across all the items comprising a subscale. The assumption is therefore that if the latent variable of interest would be statistically controlled the partial correlation between items would approach zero (Hulin, Drasgow & Parson, 1983). The intention is to obtain a relatively pure, uncontaminated indication of the specific underlying latent variable via the items comprising the scale.

To examine the unidimensionality assumption, as well as the assumption that the latent variable explains a substantial proportion of the variance observed in each item, EFA was performed on each of the subscales referred to in section 3.6. Principal axis factor analysis was used as an extraction technique (Tabachnick & Fidell, 2001) and, in the case of factor fission; the extracted solution was subjected to oblique rotation (Tabachnick & Fidell, 2001). Principal axis factoring (PAF) was preferred over principal component factor analysis (PCA) as the former only analyses common variance shared between the items comprising a subscale whereas PCA analyses all the variance (Tabachnick & Fidell, 2001). Although oblique rotation provides a solution that is slightly more difficult to interpret than the solution obtained from an orthogonal rotation, the former solution is more realistic in that it makes provision for the possibility that, if factor fission would occur, the extracted factors could be correlated. A factor loading was considered acceptable if $\lambda_{ij} > .50$. Hair, Anderson & Tantham (2006) recommend in the context of confirmatory factor analysis that factor loadings should be considered satisfactory if $\lambda_{ij} > .71$. The cut-off value suggested by Hair et al. (2006) is regarded as a bit severe in the case of individual items but was, nevertheless, utilized when interpreting the

factor loadings of the item parcels in the measurement model which was fitted prior to the evaluation of the fit of the learning potential structural model.

PASW version 19 (SPSS, 2011) was used to perform the dimensionality analyses.

3.9.3 Structural Equation Modelling

3.9.3.1 Variable type

The appropriate moment matrix to analyse as well as the appropriate estimation technique to use to estimate freed model parameters depends on the measurement level on which the indicator variables are measured. Section 3.6 indicated that two or more linear composites of individual items were formed to represent each of the latent variables when evaluating the fit of the learning potential structural model. Apart from reducing the number of freed model parameters that have to be estimated and thereby the required sample size, the creation of linear composite indicator variables for each latent variable has the additional advantage of creating more reliable indicator variables (Nunnally, 1978). On the other hand, Marsh, Hau, Balla and Grayson (1998), however, caution that solutions in confirmatory factor analysis tend to be better when larger numbers of indicators variables are used to represent latent variables. If individual items are used as indicator variables an extremely complex comprehensive LISREL model is the result. This in turn requires an extremely large sample to ensure credible parameter estimates. Consequently it was decided to use composite indicator variables. The assumption was made that the indicator variables are continuous variables, measured on an interval level (Jöreskog & Sörbom, 1996a; Mels, 2003). The covariance matrix would therefore be analysed using maximum likelihood estimation provided that the multivariate normality assumption would be met (Du Toit & du Toit, 2001; Mels, 2003).

3.9.3.2 Multivariate normality

The maximum likelihood estimation technique LISREL uses by default to obtain estimates for the freed model parameters assumes that the indicator variables follow

a multivariate normal distribution. The null hypothesis that this assumption is satisfied was consequently formally tested in PRELIS. It was decided that if the null hypothesis of multivariate normality is rejected, normalisation would be attempted (Jöreskog & Sörbom, 1996a). The success of the attempt at normalising the data was evaluated by testing the null hypothesis that the normalised indicator variable distribution follows a multivariate normal distribution. It was further decided that if the null hypothesis of multivariate normality is still rejected, robust maximum likelihood estimation would be used (Mels, 2003).

3.9.3.3 Confirmatory factor analysis

The learning potential structural model fit indices can only be interpreted unambiguously for or against the fitted learning potential structural model if evidence exists that indicates that the indicator variables used to operationalize the latent variables successfully do so (Diamantopoulos & Siguaw, 2000). The fit of the learning potential measurement model used to operationalize the learning potential structural model therefore needed to be evaluated, first, before fitting the learning potential structural model. Successful operationalization can then be concluded if the measurement model fits closely, the estimated factor loadings are all statistically significant ($p < .05$), the completely standardized factor loadings are large and the measurement error variances are statistically significant ($p < .05$) but small.

The covariance matrix was analysed when fitting the measurement model. Maximum likelihood estimation was to be used if the multivariate normality assumption was met, before or after normalization. It was decided that if normalization were to fail to achieve multivariate normality in the indicator variable distribution robust maximum likelihood estimation would be used to estimate the freed measurement model parameters. LISREL 8.8 (Du Toit & Du Toit, 2001) was decided to be used to perform the CFA.

Decisions were taken, as described in section 3.6, on how to operationalize the latent variables in the learning potential structural model depicted in Figure 3.1. In order to permit the empirical evaluation of the fit the model implies a specific

measurement model. The measurement model describes the manner in which latent variables express themselves in indicator variables. Although the comprehensive LISREL model comprises an exogenous as well as an endogenous measurement model, a single exogenous measurement model was fitted to examine the success of the operationalization of the latent variables in which all six latent variables in Figure 3.1 were treated as if they were exogenous latent variables. The measurement model is expressed as equation 5.

$$\begin{pmatrix} X_1 \\ X_2 \\ X_3 \\ X_4 \\ X_5 \\ X_6 \\ X_7 \\ X_8 \\ X_9 \\ X_{10} \\ X_{11} \\ X_{12} \\ X_{13} \end{pmatrix} = \begin{pmatrix} \lambda_{11} & & & & & \\ \lambda_{21} & & & & & \\ & \lambda_{32} & & & & \\ & \lambda_{42} & & & & \\ & & \lambda_{53} & & & \\ & & \lambda_{63} & & & \\ & & & \lambda_{74} & & \\ & & & \lambda_{84} & & \\ & & & & \lambda_{95} & \\ & & & & \lambda_{10,5} & \\ & & & & \lambda_{11,5} & \\ & & & & & \lambda_{12,6} \\ & & & & & \lambda_{13,6} \end{pmatrix} \begin{pmatrix} \xi_1 \\ \xi_2 \\ \xi_3 \\ \xi_4 \\ \xi_5 \\ \xi_6 \end{pmatrix} + \begin{pmatrix} \delta_1 \\ \delta_2 \\ \delta_3 \\ \delta_4 \\ \delta_5 \\ \delta_6 \\ \delta_7 \\ \delta_8 \\ \delta_9 \\ \delta_{10} \\ \delta_{11} \\ \delta_{12} \\ \delta_{13} \end{pmatrix} \quad \ldots\ldots.5$$

Equation 5 can be reduced to equation 6

$\mathbf{X}=\Lambda^{x}+\delta$ ---------- 6

The measurement hypothesis that was under evaluation is that the measurement model expressed as equation 5 provides a valid account of the process that produced the observed covariance matrix (Hair et al., 2006). If the measurement hypothesis would be interpreted to mean that the learning potential measurement model provides a perfect account of the manner in which the latent variables

manifest themselves in the indicator variables, the measurement hypothesis translates into the following exact fit null hypothesis:

$$H_{01a}\text{:RMSEA} = 0$$

$$H_{a1a}\text{:RMSEA} > 0$$

If the measurement hypothesis would be interpreted to mean that the measurement model only provides an approximate account of the dynamics that produced the observed covariance matrix, the measurement hypothesis translates into the following close fit null hypothesis:

$$H_{01b}\text{:RMSEA} \leq .05$$

$$H_{a1b}\text{:RMSEA} > .05$$

3.9.3.4 Interpretation of measurement model fit and parameter estimates

Measurement model fit refers to the ability of the fitted model to reproduce the observed covariance matrix. The model can be said to fit well if the reproduced covariance matrix approximates the observed covariance matrix. Measurement model fit was interpreted by inspecting the full spectrum of goodness of fit indices provided by LISREL (Diamantopoulos & Siguaw, 2000). The magnitude and distribution of the standardized residuals and the magnitude of model modification indices calculated for Λ_X, Θ_δ and Θ_ε was also examined to assess the quality of the model fit. Large modification index values indicated measurement model parameters that, if set free, would improve the fit of the model. Large numbers of large and significant modification index values comment negatively on the fit of the model in as far as it suggests that numerous possibilities exist to improve the fit of the model proposed by the researcher. Inspection of the model modification indices for the aforementioned matrices in this study served the sole purpose of commenting on the model fit.

It was decided that if close measurement model fit were obtained (i.e., H_{01b} failed to be rejected), or if at least reasonable measurement model fit were obtained, the significance of the estimated factor loadings would be determined by testing H_{01cp}: λ_{ij}

= 0; p = 1, 2, …, 13[36]; i = 1, 2, …, 13; j = 1, 2, …, 6 against H_{a1cp}: $\lambda_{ij} > 0$; p = 1, 2, …, 13; l = 1, 2, …, 13; j = 1, 2, …, 6. The magnitude of the factor loading estimates were considered acceptable if the completely standardized factor loading estimates were equal to, or greater than .71 (Hair et al. 2006). Satisfaction of this criterion would imply that at least 50% of the variance in the indicator variables would be explained by the latent variables they were assigned to represent.

3.9.3.5 Fitting of the structural model

If close measurement model fit were obtained (i.e., H_{01b} failed to be rejected), or if at least reasonable measurement model fit were obtained, if H_{01c1} – H_{01c13} was rejected and if the magnitude of completely standardized factor loading estimates were satisfactory, H_{02a} and H_{02b} would be tested. This would be done by fitting the comprehensive LISREL model (comprising the structural model and the measurement model). The comprehensive LISREL model would be fitted by analysing the covariance matrix. Maximum likelihood estimation was to be used if the multivariate normality assumption was satisfied (before or after normalization). If normalization failed to achieve multivariate normality in the indicator variable distribution then robust maximum likelihood estimation would be used to obtain estimates for the freed model parameters. LISREL 8.8 (Du Toit & Du Toit, 2001) was decided to be used to perform the structural equation analysis.

3.9.3.6 Interpretation of structural model fit and parameter estimates

It was decided that the comprehensive LISREL model fit was to be interpreted by inspecting the full spectrum of indices provided by LISREL (Diamantopoulos & Siguaw, 2000). Further consideration would also given to the magnitude and distribution of the standardized residuals and the magnitude of model modification indices calculated for Γ, B and Ψ. Large modification index values indicate structural model parameters that, if set free, would improve the fit of the model. Large numbers of large and significant modification index values comment negatively on the fit of the

[36] There are 13 factor loadings freed in the 13x6 Λ_X factor loading matrix.

model in as far as it suggests that numerous possibilities exist to improve the fit of the model proposed by the researcher. The inspection of the model modification indices for the aforementioned matrices here primarily served the purpose of commenting on the model fit. Inspection of the model modification calculated for the Γ and $\mathbf{B}$ matrices, however, also were used to explore possible modifications to the current structural model if such modifications were to make substantive theoretical sense.

If the comprehensive LISREL model were to achieve close fit (i.e. H_{02b} fails to be rejected) or if at least reasonable fit were obtained for the comprehensive model, H_{03} – H_{019} would be tested and the magnitude of the completely standardized path coefficients would be interpreted for all significant (direct effect) path coefficients. The significance and magnitude of the indirect and total effects would also be examined for each hypothesized influence[37] in the model.[38] The proportion of variance explained in each of the endogenous latent variables by the model would also be interpreted.

In the final analysis the psychological explanation of *Learning Performance* as it is captured in the learning potential structural model depicted in Figure 3.1 would be considered to be satisfactory if the comprehensive model were to fit the data well, the measurement model were to fit the data well, the path coefficients for the hypothesized structural relations were significant and the model would be found to explain a substantial proportion of the variance in each of the endogenous latent variables (especially the learning competency latent variables).

3.9.3.7 Considering possible structural model modification

It was further decided that the modification indices and completely standardized expected change values (Diamantopoulos & Siguaw, 2000) calculated for the Γ and

[37] The term influence refers here to the indirect and total effect of ξ_j on η_i and the indirect and total effect of η_j on η_i.

[38] Strictly speaking formal statistical hypotheses should have been explicitly stated for the indirect and total effects in the model.

B matrices would be inspected to determine whether any meaningful possibilities exist to improve the fit of the comprehensive model through the addition of additional paths. Modification of the model would however only be considered if the proposed structural changes could be theoretically substantiated (Diamantopoulos & Siguaw, 2000; Henning, Theron & Spangenberg, 2004). Allowing for correlated structural error terms and for correlated measurement model error terms was consequently decided not to be considered.

3.10 SUMMARY

In this section the hypotheses relevant to the study were stated, as well as the decided upon research methodology to be used to test the hypotheses. An overview of the research design, sampling technique and the resultant sample measuring instruments and statistical analysis techniques was provided.

CHAPTER 4
RESEARCH RESULTS

4.1 INTRODUCTION

The purpose of Chapter 4 is to present and discuss the statistical results of the various analyses performed. This chapter will start off by discussing the item analysis executed to determine the psychometric integrity of the indicator variables meant to represent the various latent dimensions, followed by an evaluation of the extent to which the data satisfied the statistical data assumptions relevant to the data analysis techniques utilised. The fit of the measurement model is subsequently evaluated. In evaluating the success with which the latent variables comprising the structural model had been operationalized no distinction is made between the exogenous and endogenous measurement models. On condition of acceptable measurement model fit, the structural model was to be considered.

4.2 MISSING VALUES

Only a limited number of missing values occurred on the items comprising the various subscales of the Learning Potential Questionnaire (LPQ). The maximum number of respondents who failed to respond to any individual item was 4. Table 4.1 depicts the distribution of missing values across items.

Table 4.1

Distribution of missing values across items

CE1	CE2	CE3	CE4	CE5	CE6	CE7	CE8	CE9
0	2	0	0	3	2	2	3	0
CE10	CE11	CE12	CE13	CE14	CE15	CE16	CE17	SL1
3	3	1	3	4	0	0	1	1
SL2	SL3	SL4	SL5	SL6	SL7	SL8	SL9	SL10
2	1	0	2	0	1	1	1	2
SL11	SL12	SL13	SL14	SL15	SL16	SL17	SL18	SL19
1	1	0	2	3	1	1	1	4
SL20	SL21	SL22	SL23	ASE1	ASE2	ASE3	ASE4	ASE5
1	0	0	0	0	0	1	0	1
ASE6	ASE7	ASE8	ASE9	ASE10	ASE11	ASE12	C1	C2
1	0	3	3	1	0	1	0	0
C3	C4	C5	C6	C7	C8	C9	C10	C11
3	1	0	0	2	1	1	1	0
C12	LM1	LM2	LM3	LM4	LM5	LM6	NEng1	NEng2
1	1	2	4	0	1	3	0	0
NAfri1	NAfri2	NMath1	NMath2					
0	0	0	0					

CE = Time Cognitively Engaged; SL = Academic Self-leadership; ASE = Academic Self-Efficacy; C = Conscientiousness; LM = Learning Motivation; NEng1, NEng2, NAfri1, NAfri2, NMath1, NMath2 = Learning Performance.

As mentioned, calculating the composite indicator variables without appropriately treating the problem of missing values can result in seemingly adequate, but in reality deficient, indicator variables. The method used to impute missing values depends on the number of missing values as well as the nature of the data, especially whether the assumption for multivariate normality is met. As mentioned, the dataset had very few missing values. Nevertheless there were a few and the presence of missing values needed to be addressed before the data could be analysed. Various options were considered which are briefly discussed below (Du Toit & Du Toit, 2001; Mels, 2003):

- List-wise deletion
- Pair-wise deletion
- Imputation by matching
- Multiple imputation
- Full information maximum likelihood imputation

The treatment of the missing value problem typically used as the default option in most statistical analyses is list-wise deletion of cases. *List-wise deletion* requires the deletion of complete cases where there are missing values for any of the variables. The danger with this option is that the size of the sample could be reduced which could result in sampling bias (Du Toit & Du Toit, 2001). In this case it would have reduced the sample from 460 to 400. However, in spite of this pitfall, the main advantage of this method is that all analyses are conducted with the same number of cases.

Pair-wise deletion, another option, focuses on deleting cases only for analysis on variables where values are missing (Dunbar-Isaacson, 2006). The downside of this option is that deletion can produce problems in the calculation of the observed covariance matrix when the effective sample size for the calculation of the various covariance terms differs markedly. Pair-wise deletion also does not present itself as a feasible solution to the problem in the calculation of item parcels in that it would simply perpetuate the problem on the item parcel level.

Multiple imputation assumes that data is missing at random and that the observed data follows an underlying multivariate normal distribution (Du Toit & Du Toit, 2001). The advantage of both the two multiple imputation procedures available in LISREL is that estimates of missing values are derived for all the cases in the initial sample (i.e., no cases with missing values are deleted) and the data set is available for subsequent item and dimensionality analyses, as well as the formulation of item parcels (Du Toit & Du Toit, 2001; Mels, 2003). The multiple imputation method conducts several imputations for each missing value. Each imputation creates a completed data set, which could be analysed separately in order to obtain multiple estimates of the parameters of the model Raghunatha & Schafer (as cited in Dunbar-Isaacson, 2006). In LISREL missing values for each case are substituted with the average of the values imputed in each of the data sets (Du Toit & Du Toit, 2001). Plausible values are therefore delivered whilst also reflecting the uncertainty in the estimates.

The possibility of using *imputation by matching* to solve the missing value problem was also considered. Imputation by matching makes less stringent assumptions than

the multiple imputation procedures. The procedure, however, still assumes that the data values are missing at random. Imputation by matching refers to a process of substituting of real values for missing values. The substitute values replaced for a case are derived from one or more cases that have a similar response pattern over a set of matching variables (Jöreskog & Sörbom, 1996b). A minimisation criterion is applied on a set of matching variables Jöreskog & Sörbom (as cited in Dunbar-Isaacson, 2006). Imputation does not take place for a case if the minimization criterion is not satisfied or if no observation exists that has complete data on the set of matching variables Enders et al (as cited in Dunbar-Isaacson, 2006). By default, cases with missing values after imputation are eliminated.

Full information maximum likelihood (FIML) utilises a repetitive approach, the expectation-maximisation (EM) algorithm, which computes a case-wise likelihood function using only the variables that are observed for specific cases. Estimates of missing values are obtained based on the incomplete observed data to maximise the observed data likelihood Enders & Bandalos (as cited in Dunbar-Isaacson, 2006). FIML has the disadvantage that it directly returns a covariance matrix calculated from the imputed data. Further item analysis, dimensionality analysis and the calculation of item parcels is therefore not possible. FIML also makes the rather strenuous assumption that data is missing at random and that the observed data follows an underlying multivariate normal distribution (Du Toit & Du Toit, 2001).

To solve the missing value problem, imputation by matching was used. Imputation by matching was preferred over multiple imputation as the assumption of multivariate normality was not met in this dataset. Imputation by matching involves a process of substituting missing values with real values. The replacement values assigned to a case are derived from one or more other cases that have a similar response pattern over a set of matching variables (Jöreskog & Sörbom, 1996a). It is preferable to use matching variables that will not be used in the subsequent structural equation modelling analysis. This, however, was not possible. Twenty three variables with zero missing values served as matching variables. PRELIS succeeded in imputing the missing values for all cases with missing values cases. The imputed sample therefore retained all 460 cases.

4.3 ITEM ANALYSIS

Item analysis via the SPSS reliability procedure allows one to detect and remove those items not contributing to a valid and reliable description of the latent dimension in question. The rationale behind performing an item analysis is that item analysis can be very informative when a scale is unreliable or fails to show expected levels of validity. It can also help explain why a scale is reliable or unreliable as well as suggest ways of improvement. Furthermore, the reliability and validity of a scale can generally be improved by removing bad items. As mentioned, bad items are items that do not reflect the latent dimension that the items have been tasked to reflect, that are not sensitive to relative small differences on the latent dimension and/or that do not respond in unison with other items assigned to a specific subscale.

Item analysis was conducted on each of the latent variable scales included in the Learning Potential Questionnaire (LPQ) used to measure the latent variables included in the learning potential structural model depicted in Figure 3.1. Item analyses were conducted to investigate: (i) the reliability of indicators of each latent variable, (ii) homogeneity of each sub-scale and (iii) screen items prior to their inclusion in composite item parcels representing the latent variables.

Item analysis was performed on the imputed data set only. Item analysis was performed via the Reliability procedure of SPSS 19 (SPSS, 2011).

4.3.1 Item analysis findings

Table 4.2 represents a summary of the item analysis results for each of the latent variable scales. The coefficient of internal consistency (Cronbach's alpha) for all 5 sub-scales was found to be satisfactory (> .80) and six items were deleted in total.

Table 4.2

Reliability results of learning potential latent variable scales

Scale	Sample Size	Number of items	Mean	Variance	Standard Deviation	Cronbach's Alpha
C	460	12	43.771	148.623	12.19112	.927
ASE	460	11	48.578	115.747	10.75859	.933
LM	460	6	32.1826	39.810	6.30949	.899
TE	460	15	58.2217	199.737	14.13284	.940
SL	460	20	79.5978	313.470	17.70508	.924

C = Conscientiousness, ASE = Academic Self-Efficacy, LM = Learning Motivation, TE = Time Cognitively Engaged, SL = Academic Self-leadership.

4.3.1.1 Conscientiousness

The *Conscientiousness* scale comprised 12 items (see Appendix A). The results for the item analysis for the *Conscientiousness* scale are depicted in Table 4.3. The *Conscientiousness* scale obtained a Cronbach's alpha of .890. The absence of extreme means and small standard deviations indicated the absence of poor items. When looking at the item statistics the means fell in a range from 2.8587 to 4.3565 (on a 7-point scale) and the standard deviations from 1.18514 to 1.97468.

Table 4.3

Item analysis results for the Conscientiousness scale

Cronbach's Alpha	Cronbach's Alpha Based on Standardized Items	N of Items
.890	.904	12

	Mean	Std. Deviation	N
C1	3.88696	1.320297	460
C2	4.12609	1.185136	460
C3	2.85652	1.973976	460
C4	4.07826	1.255214	460
C5	3.96739	1.292269	460
C6	3.68478	1.262233	460
C7	3.48696	1.670533	460
C8	3.81739	1.294080	460
C9	4.35652	1.304868	460

	Scale Mean if Item Deleted	Scale Variance if Item Deleted	Corrected Item-Total Correlation	Squared Multiple Correlation	Cronbach's Alpha if Item Deleted
C1	39.88478	126.298	.689	.557	.877
C2	39.64565	129.963	.633	.487	.881
C3	40.91522	148.422	-.080	.064	.926
C4	39.69348	128.718	.639	.549	.880
C5	39.80435	127.848	.649	.554	.879
C6	40.08696	126.899	.703	.559	.877
C7	40.28478	117.629	.774	.658	.871
C8	39.95435	126.588	.694	.537	.877
C9	39.41522	129.442	.584	.463	.882
C10	40.58696	117.507	.733	.798	.873
C11	40.71087	117.391	.759	.801	.872
C12	40.50652	115.418	.770	.739	.871

C10	3.18478	1.754728	460
C11	3.06087	1.712631	460
C12	3.26522	1.801502	460

	Mean	Minimum	Maximum	Range	Maximum / Minimum	Variance	N of Items
Item Means	3.648	2.857	4.357	1.500	1.525	.224	12
Item Variances	2.276	1.405	3.897	2.492	2.774	.724	12
Inter-Item Correlations	.439	-.167	.868	1.035	-5.195	.060	12

Inter-item correlations below .50 were obtained for items C2, C7, C9, C10, C11, and C12. Item C3 had the lowest correlations ranging from -.038 to -.166. Besides item C3, all the other items obtained correlations larger than .30. The squared multiple correlation indicates the multiple correlation when regressing each item on a weighted linear composite of the remaining variables. As can be seen in Table 4.3 item C3 was the only item where the squared multiple correlation was smaller than 0.30. Furthermore the item statistics indicated that the Cronbach's alpha would increase to .927 if item C3 were to be deleted. It was further indicated that the *Conscientiousness* scale's Cronbach alpha of .890 would, in the case of the deletion

of any of the other indicated items, not increase. Based on this basket of evidence it was decided to reflect[39] the negatively worded and potentially poor item, C3.

After item C3 was reflected and the analysis was re-run the Cronbach's Alpha increased from .890 to .920. The correlations in the inter-item correlation matrix for item C3 also showed an increase, but were still low (i.e., ranging from .125 to .337). The item-total statistics indicated that Cronbach's alpha would increase to .927 if item C3 were to be deleted. The decision was then made to delete item C3 from the item pool, decreasing the scale length from 12 to 11 items.

After item C3 was deleted the analysis was re-run and a Cronbach's alpha of .927 was obtained. The item statistics indicated a mean ranging from 3.0609 to 4.1261 and a standard deviation ranging from 1.18514 to 1.80150. The inter-item correlation matrix further indicated few items with correlations lower that 0.50 with the lowest being .391 for C10. Nevertheless, the item-total statistics indicated that none of the items, if deleted, would further increase the Cronbach alpha and item C3 was therefore the only item deleted from the *Conscientiousness* scale.

4.3.1.2 Academic Self-efficacy

The *Academic Self-efficacy* scale comprised 12 items (see Appendix A). The results for the item analysis for the *Academic Self-efficacy* scale are depicted in Table 4.4.

[39] Reflection of an item refers to the mathematical recoding of the item responses by subtracting the current item scores from a constant one numerical value higher than the highest scale score. Given that *Conscientiousness* is measured on a 7-point scale the constant in this case is 8.

Table 4.4

Item analysis results for the Academic Self-efficacy scale

Cronbach's Alpha	Cronbach's Alpha Based on Standardized Items	N of Items
.906	.910	12

	Mean	Std. Deviation	N
ASE1	4.0391	1.27084	460
ASE2	4.4261	1.24590	460
ASE3	3.3565	1.45636	460
ASE4	3.9609	1.29461	460
ASE5	3.9326	1.24452	460
ASE6	4.2609	1.26861	460
ASE7	4.2022	1.24564	460
ASE8	3.9391	1.26310	460
ASE9	3.9022	1.38195	460
ASE10	3.7478	1.23911	460
ASE11	3.9391	1.29209	460
ASE12	4.8587	1.14695	460

	Scale Mean if Item Deleted	Scale Variance if Item Deleted	Corrected Item-Total Correlation	Squared Multiple Correlation	Cronbach's Alpha if Item Deleted
ASE1	44.5261	97.540	.678	.532	.896
ASE2	44.1391	98.399	.656	.487	.897
ASE3	45.2087	115.747	-.054	.026	.933
ASE4	44.6043	97.643	.659	.470	.897
ASE5	44.6326	96.381	.747	.607	.893
ASE6	44.3043	96.317	.733	.605	.893
ASE7	44.3630	96.105	.758	.620	.892
ASE8	44.6261	95.917	.754	.609	.892
ASE9	44.6630	94.782	.724	.573	.894
ASE10	44.8174	96.699	.736	.579	.893
ASE11	44.6261	95.864	.737	.588	.893
ASE12	43.7065	100.029	.646	.460	.898

	Mean	Minimum	Maximum	Range	Maximum / Minimum	Variance	N of Items
Item Means	4.048	3.357	4.859	1.502	1.448	.136	12
Item Variances	1.642	1.316	2.121	.805	1.612	.042	12
Inter-Item Correlations	.459	-.091	.679	0.77	-7.426	.054	12

The Academic Self-efficacy scale obtained a Cronbach's alpha of .906. The item statistics showed the mean ranging from 3.3565 to 4.8587 (on a 7-point scale) and the standard deviation ranging from 1.14695 to 1.45636. In the inter-item correlation matrix item ASE3 stood out dramatically with all its correlations below .50 and all negative, as expected. Furthermore, the corrected item-total correlation flagged item ASE3 as a poor item as it obtained a correlation of -.054, compared to the other item correlations which ranged from .646 to .758. The squared multiple correlations also suggested that item ASE3 was a poor item as it obtained a value of .026 compared to the rest of the items which returned values ranging from .460 to .620.

Furthermore, it was indicated that the deletion of item ASE3 would increase Cronbach's alpha from .906 to .933 whilst none of the other items, if deleted, would result in an increase in the Cronbach alpha. With all the above mentioned evidence it was decided to reflect item ASE3, due to the item being negatively worded and as it was found to correlate negatively. The analysis was therefore re-run.

The results of the re-run analysis after item ASE3 was reflected indicated an increase in the Cronbach alpha from .906 to a value of .924. Nevertheless, in the inter-item correlation matrix the correlations of ASE3 with the remaining items were still very low, ranging from .119 to .231. Furthermore the item-total statistics indicated that the Cronbach alpha would increase from .924 to .933 if ASE3 was to be deleted. It was therefore decided to delete item ASE3. After the item was deleted the analysis was run again and the inter-item correlations indicated only a few items below the .50 mark, the lowest being .419 for item ASE12. Nevertheless, it was indicated that none of the items, if deleted, would increase the Cronbach's alpha of .933 and hence item ASE3 was the only item deleted from the *Academic Self-efficacy* scale.

4.3.1.3 Learning Motivation

The *Learning Motivation* scale comprised 6 items (see Appendix A). The results for the item analysis for the *Learning Motivation* scale are depicted in Table 4.5.

Table 4.5

Item analysis results for the Learning Motivation scale

Cronbach's Alpha	Cronbach's Alpha Based on Standardized Items	N of Items
.899	.899	6

	Mean	Std. Deviation	N
LM1	5.4848	1.20898	460
LM2	5.2196	1.33564	460
LM3	5.0870	1.29565	460
LM4	5.4130	1.27957	460
LM5	5.3326	1.26466	460
LM6	5.6457	1.35541	460

	Scale Mean if Item Deleted	Scale Variance if Item Deleted	Corrected Item-Total Correlation	Squared Multiple Correlation	Cronbach's Alpha if Item Deleted
LM1	26.6978	29.349	.687	.492	.886
LM2	26.9630	28.193	.693	.513	.886
LM3	27.0957	27.629	.771	.600	.874
LM4	26.7696	28.308	.724	.560	.881
LM5	26.8500	28.498	.719	.534	.882
LM6	26.5370	27.260	.757	.606	.876

	Mean	Minimum	Maximum	Range	Maximum / Minimum	Variance	N of Items
Item Means	5.363	5.087	5.645	0.558	1.110	.039	6
Item Variances	1.667	1.462	1.833	.372	1.254	.018	6
Inter-Item Correlations	.594	.504	.689	.185	1.373	.003	6

Learning motivation returned the lowest Cronbach alpha (.899) of all the scales. Visual inspection of the means and standard deviations revealed the absence of extreme means and small standard deviations and therefore the absence of poor items. The mean ranged from 5.0870 to 5.6457 (on a 7-point scale) and the standard deviation ranged from 1.20898 to 1.35541. The inter-item correlation matrix revealed that all the items correlated above .50 with the lowest correlation being .504 for item LM4. All the corrected item total correlations were larger than .30 indicating that the correlation between each item and the total score calculated from the remaining items was satisfactorily and that the items were reflecting the same underlying factor. In addition, the squared multiple correlations were all larger than .30 and the results revealed that none of the items, if deleted, would increase the current Cronbach alpha. None of the items were therefore flagged as problematic items and all the items of the *Learning Motivation* scale were retained.

4.3.1.4 Time Cognitively Engaged

The *Time Cognitively Engaged* scale comprised 17 items (see Appendix A). The results for the item analysis for the *Time Cognitively Engaged* scale are depicted in Table 4.6.

Table 4.6

Item analysis results for the Time Cognitive Engagement scale

Cronbach's Alpha	Cronbach's Alpha Based on Standardized Items	N of Items
.936	.939	17

	Mean	Std. Deviation	N
CE1	3.73913	1.145889	460
CE2	3.73043	1.203276	460
CE3	4.06957	1.213373	460
CE4	4.13696	1.160696	460
CE5	3.89130	1.138134	460
CE6	3.51304	1.330816	460
CE7	3.71304	1.370497	460
CE8	4.00217	1.388560	460
CE9	3.87609	1.459651	460
CE10	3.81522	1.321264	460
CE11	3.68696	1.533164	460
CE12	3.82609	1.274936	460
CE13	4.05000	1.250577	460
CE14	3.85435	1.482829	460
CE15	4.11304	1.291941	460
CE16	3.89348	1.274674	460
CE17	3.85435	1.299607	460

	Scale Mean if Item Deleted	Scale Variance if Item Deleted	Corrected Item-Total Correlation	Squared Multiple Correlation	Cronbach's Alpha if Item Deleted
CE1	62.02609	217.015	.765	.656	.930
CE2	62.03478	217.367	.714	.618	.931
CE3	61.69565	222.273	.564	.408	.934
CE4	61.62826	218.334	.714	.589	.931
CE5	61.87391	219.505	.693	.552	.932
CE6	62.25217	216.250	.668	.489	.932
CE7	62.05217	213.257	.725	.585	.931
CE8	61.76304	213.253	.715	.555	.931
CE9	61.88913	216.029	.606	.448	.934
CE10	61.95000	213.629	.745	.603	.930
CE11	62.07826	218.608	.512	.374	.936
CE12	61.93913	217.195	.674	.637	.932
CE13	61.71522	215.137	.748	.697	.930
CE14	61.91087	223.297	.421	.288	.938
CE15	61.65217	214.314	.745	.639	.930
CE16	61.87174	214.879	.740	.612	.931
CE17	61.91087	221.084	.553	.375	.935

	Mean	Minimum	Maximum	Range	Maximum / Minimum	Variance	N of Items
Item Means	3.869	3.513	4.137	.624	1.178	.028	17
Item Variances	1.709	1.295	2.351	1.055	1.815	.096	17
Inter-Item Correlations	.473	.199	.756	.557	3.797	.012	17

The reliability statistics indicated a Cronbach's alpha of .936. The item statistics showed the item means to range from 3.5130 to 4.1130 (on a 7-point scale) and the standard deviation to range from 1.13813 to 1.53511. In the inter-item correlation matrix all the items correlated below .50 with one or more of the other items in the scale. All the corrected item total and squared multiple correlations were larger than .30. Further inspection indicated two items to be flagged. Item CE11 and CE14 obtained the lowest squared multiple correlation and corrected item-total correlation values. The results indicated that these two poor items, if deleted, would increase the Cronbach alpha. Although the increases were both negligible the two items were clearly poor items and were subsequently deleted from the item pool.

The analysis was subsequently re-run without items CE11 and CE14 and a Cronbach alpha of .940 was obtained. The items statistics revealed no extreme means or standard deviations and none of the remaining items, if deleted, would result in an increase in the current Cronbach alpha. The *Time Cognitively Engaged* scale was therefore reduced from 17 to 15 items.

4.3.1.5 Academic Self-leadership

The *Academic Self-Leadership* scale comprised 23 items (see Appendix A). The results for the item analysis for the *Academic Self-leadership* scale are depicted in Table 4.7.

Table 4.7

Item analysis results for the Academic Self-leadership scale

Cronbach's Alpha	Cronbach's Alpha Based On Standardized Items	N of Items
.923	.924	23

	Mean	Std. Deviation	N
SL1	4.2935	1.32791	460
SL2	4.1500	1.23020	460
SL3	3.9217	1.29283	460
SL4	3.4043	1.54440	460
SL5	3.7696	1.46683	460
SL6	4.4826	1.31760	460
SL7	4.3543	1.33271	460
SL8	3.8652	1.51940	460
SL9	3.7630	1.53618	460
SL10	3.7261	1.18035	460
SL11	3.7304	1.29905	460
SL12	4.2217	1.41989	460
SL13	4.0804	1.44622	460
SL14	4.4130	1.40302	460
SL15	3.9630	1.39901	460
SL16	3.8739	1.43614	460
SL17	3.8630	1.44799	460
SL18	3.7739	1.27357	460
SL19	3.9000	1.26577	460
SL20	4.0196	1.32252	460
SL21	4.1739	1.31033	460
SL22	3.9848	1.59854	460
SL23	3.9109	1.66950	460

	Scale Mean if Item Deleted	Scale Variance if Item Deleted	Corrected Item-Total Correlation	Squared Multiple Correlation	Cronbach's Alpha if Item Deleted
SL1	87.3457	353.325	.567	.547	.920
SL2	87.4891	355.248	.575	.576	.919
SL3	87.7174	353.593	.579	.471	.919
SL4	88.2348	346.511	.600	.490	.919
SL5	87.8696	346.623	.634	.531	.918
SL6	87.1565	352.311	.594	.644	.919
SL7	87.2848	353.903	.553	.616	.920
SL8	87.7739	360.210	.362	.663	.924
SL9	87.8761	358.741	.383	.668	.923
SL10	87.9130	357.356	.553	.500	.920
SL11	87.9087	354.745	.551	.491	.920
SL12	87.4174	351.673	.558	.569	.920
SL13	87.5587	355.506	.473	.595	.921
SL14	87.2261	357.056	.460	.489	.921
SL15	87.6761	346.599	.669	.583	.918
SL16	87.7652	348.869	.605	.530	.919
SL17	87.7761	346.671	.642	.567	.918
SL18	87.8652	355.577	.546	.408	.920
SL19	87.7391	352.415	.618	.500	.919
SL20	87.6196	352.759	.582	.464	.919
SL21	87.4652	349.809	.650	.503	.918
SL22	87.6543	344.776	.608	.729	.919
SL23	87.7283	342.255	.621	.735	.918

	Mean	Minimum	Maximum	Range	Maximum / Minimum	Variance	N of Items
Item Means	3.984	3.4043	4.4826	1.0783	1.317	.066	23
Item Variances	1.954	1.388	2.787	1.399	2.008	.124	23
Inter-Item Correlations	.346	.121	.833	.712	15.169	.014	23

A Cronbach's alpha of .923 was obtained for the *Academic Self-leadership* scale. Further investigation showed that the items means ranged from 3.4043 to 4.4826 (on a 7-point scale) for the 23 items included in the scale. Standard deviations ranged from 1.18035 to 1.66950. Items SL8, SL9, SL10, SL11, SL12, SL13 and SL14 generally returned the lowest inter-item correlations with items SL8, SL9 and SL14 showing the lowest correlations of all of the 23 items. Of these, items SL8 and SL9 represent the strategy 'self-reward', items SL10 and SL11 make up the strategy 'evaluating beliefs and assumptions' and items SL12, SL13, SL14 make up the 'self-punishment' strategy which (J. Houghton, personal communication, 18 February 2011) warned may cause problems and should either need to be reflected or omitted. Furthermore, all the corrected item total correlations and squared multiple correlations were larger than .30 with items SL8, SL9, SL13 and SL14 receiving the lowest values. The item-total statistics indicated that the Cronbach alpha would remain at .923 if item SL9 were deleted and would increase, to .924, if the item SL8 were deleted. As for the rest of the items, the item-total statistics indicated that if they were deleted the Cronbach alpha for the scale would decrease.

The item analysis was then re-run without item SL8. The re-run analysis provided a basket of evidence incriminating item SL9 as a poor item. The results revealed that the deletion of SL9 would produce only a marginal increase in the Cronbach alpha to .925, but it was nonetheless decided, based on all the evidence incriminating item SL9, to also delete item SL9 from the Academic Self-leadership scale.

The analysis was subsequently re-run, with items SL8 and SL9 deleted, and a satisfactory Cronbach alpha of .925 was obtained. The items statistics revealed no extreme means or standard deviations and none of the remaining items, if deleted, would result in a further increase in the current Cronbach alpha.

4.4 DIMENSIONALITY ANALYSIS

The architecture of each the latent variable scales, besides *Academic Self-leadership*, was intended to reflect essentially one-dimensional sets of items. These items were meant to operate as stimulus sets to which test takers respond with behaviour that is primarily an expression of that specific one-dimensional underlying latent variable. The intention was to obtain a relatively uncontaminated measure of the specific latent variables.

Allen and Yen (1979) describe factor analysis as referring to a family of multivariate statistical procedures that seeks to condense a large number of observed variables (in this case items) into highly correlated groups that measure a single underlying construct. In the context of this research, the observed variables are the extent of agreement with specific behavioural statements. Byrne (2001) discusses a factor-analytic model as primarily focused on how, and the extent to which, values on the observed variables are generated by underlying latent variables or factors. The factor loading pattern and the parameters characterising the regression paths from the factors to the observed variables (i.e., factor loadings) are therefore of primary interest in this instance. Factor loading is described as the slope of the regression of an observed variable on the underlying factor that it represents (Allen & Yen, 1979). Byrne (2001) further indicates that although inter-factor relations are of interest, any regression structure amongst them is not considered in the factor-analytic model. In essence this approach assumes that each variable is a linear combination of some number of common factors and a unique factor. According to Stanek (1995, p. 9), this can be presented as follows:

$$Z_j = [\Sigma]\ k(a_{jk}S_k) + a_j uSju$$

Where:

z - standardized variable,

a - factor loading

s - -common factor or factor score

j - index for variables,

k - index for factors, and

u - denotes the unique portion

Unrestricted Principal Axis Factor Analyses with oblique rotation was performed on the various scales to evaluate the unidimensionality assumption and to evaluate the success with which each item, along with the rest of the items in the particular scale, measures the specific latent variable it was designed to reflect.

Decisions taken on items (i.e., deletion of items) in the preceding item analyses were honoured in the factor analyses. The decision on how many factors to extract to explain the observed correlation matrix was based on the eigenvalue-greater-than-one rule and on the scree test (Tabachnick & Fidell, 2007). Factor loadings were considered satisfactory if they were greater than .50. The adequacy of the extracted solution was evaluated by calculating the percentage of large residual correlations. Residual correlations were considered to be large if they are larger than .05. Table 4.8 provides some results of the factor analysis of the Learning Potential Questionnaire (LPQ) scales which are further elaborated upon in the subsequent sections.

Table 4.8

Factor analysis results for the Learning Potential Questionnaire (LPQ) scales

Scales	(KMO)	Bartlett's Test	Maximum loading	Minimum loading	Proportion of variance accounted for by a single factor	Percentage Non-redundant residuals	Number of Factors Extracted
C	0.929	3552.016	0.807	0.649	54.224%	67.0%	2
ASE	0.950	3098.174	0.797	0.678	56.109%	14.0%	1
LM	0.896	1517.995	0.823	0.728	59.800%	26.0%	1
CE	0.953	4285.345	0.793	0.578	51.960%	24.0%	1
SL	0.900	4881.813	0.711	0.473	38.205%	37.0%	5

C = Conscientiousness, ASE = Academic Self-Efficacy, LM = Learning Motivation, TE = Time Cognitively Engaged, SL = Academic Self-leadership.

4.4.1 Conscientiousness

Item C3 was found to be a poor item in the item analysis and was therefore not included in the dimensionality analysis of the *Conscientiousness* scale. The correlation matrix should contain correlations that that are bigger than .30 and significant ($p < .05$) for the correlation matrix to be factor analyzable. The correlation matrix indicated that the matrix was factor analyzable as all the correlations were bigger than .30 and all were significant ($p < .05$). The Kaiser-Meyer-Olkin (KMO) is a measure of sampling adequacy and reflects the ratio of the sum of the squared inter-item correlations to the sum of the squared inter-item correlations plus the sum of the squared partial inter-item correlations, summed across all correlations. When the KMO approaches unity, or at least achieves a value bigger than .60, the correlation matrix is deemed factor analyzable (Tabachnick & Fidell, 2007). A KMO value of .929 was obtained providing sufficient evidence that the *Conscientiousness* scale was factor analyzable (> .60). The Bartlett's Test of Sphericity tests the null hypothesis that the correlation matrix is an identity matrix in the population (i.e., the diagonal contains 1's and all off-diagonal elements are zero's) (Tabachnick & Fidell, 2007). The Bartlett's Test of Sphericity indicated that H_0 could be rejected ($p < .05$) providing further support that the matrix was factor analyzable.

However contrary to what was hypothesised in the design of the scale, two factors had to be extracted to adequately explain the observed correlation matrix, since two factors obtained eigenvalues greater than 1. The pattern matrix[40] is depicted in Table 4.9.

[40] The pattern matrix reflects the unique relationship between the items and the underlying factors when controlling for the correlation (shared variance) between the factors (Tabachnick & Fidell, 2007).

Table 4.9

Rotated factor structure for the Conscientiousness scale

	Factor	
	1	2
C4	**.832**	.091
C5	**.815**	.070
C1	**.725**	-.058
C9	**.692**	-.001
C2	**.691**	-.011
C6	**.654**	-.153
C8	**.619**	-.174
C10	-.079	**-.983**
C11	-.011	**-.932**
C12	.090	**-.818**
C7	.295	**-.596**

The four items loading on the second factor all appeared to refer to the planning and scheduling of time. The items loading on the first factor seem to reflect a more general conscientiousness theme. Although not originally part of the conceptualisation of the latent variable, the factor fission obtained on this scale nonetheless to some degree makes substantive theoretical sense.

However, in the proposed structural model *Conscientiousness* was treated as a single, undifferentiated latent variable. In order to determine how well the items of the *Conscientiousness* scale reflect a single underlying latent variable the analysis was re-run, by forcing the extraction of a single factor. The resultant single-factor factor structure is shown in Table 4.10. All items loaded onto the one factor with factor loadings larger than .50 which can be considered as satisfactorily.

Table 4.10

Factor matrix when forcing the extraction of a single factor (Conscientiousness)

	Factor
	1
C7	.807
C12	.796
C11	.790
C10	.765
C6	.753
C8	.740
C1	.732
C5	.696
C4	.692
C2	.658
C9	.649

The residuals correlations were computed for both the 2-factor and the 1-factor solution. For the 2-factor solution only 3% of non-redundant residuals had absolute values greater than .05 thus suggesting that the rotated factor solution provides a very credible explanation for the observed inter-item correlation matrix. The 1-factor solution, however, failed to provide a credible explanation in that 38 (69%) of the residual correlations were greater than .05.

4.4.2 Academic Self-efficacy

For this scale the dimensionality analysis was run by excluding item ASE3 which was found to be a poor item in the item analysis. The correlation matrix showed that all correlations were larger than .30 and all were significant ($p < .05$). The scale obtained a KMO of .950 and the Bartlett's Test of Sphericity allowed for the null hypothesis to be rejected, thus there was strong evidence that the correlation matrix was factor analyzable.

One factor was extracted, since only one factor obtained an eigenvalue greater than 1. The scree plot also suggested that a single factor should be extracted. The factor matrix indicated that all the items loaded on one factor satisfactorily as all factor loadings were larger than .50. The resultant factor structure is shown in Table 4.11. Furthermore only 14.0% of the reproduced correlations were larger than .05 suggesting that the rotated factor solution provides a credible explanation for the observed inter-item correlation matrix. The unidimensionality assumption was thus corroborated.

Table 4.11

Rotated factor structure for the Academic Self-efficacy scale

	Factor
	1
ASE7	.797
ASE5	.790
ASE8	.788
ASE11	.782
ASE6	.778
ASE10	.771
ASE9	.756
ASE1	.712
ASE4	.694
ASE2	.679
ASE12	.678

4.4.3 Learning Motivation

The results for this dimensionality analysis indicated that the correlation matrix was factor analyzable as all the obtained correlations exceeded .30 and all were significant ($p < .05$). Furthermore, the KMO was .896 and the Bartlett's Test of Sphericity indicated that H_0 could be rejected.

One factor was extracted in terms of the observed correlation matrix, since only one factor obtained an eigenvalue greater than 1. As expected, the factor matrix indicated that all the items loaded onto one factor satisfactorily. All the obtained factor loadings were bigger than .70 and only 26.0% of the reproduced correlations were larger than .50, suggesting that the rotated factor solution provides a credible explanation for the observed inter-item correlation matrix. The resultant factor structure is shown in Table 4.12. The unidimensionality assumption for this scale was thus corroborated.

Table 4.12

Rotated factor structure for the Learning Motivation scale

	Factor
	1
LM3	.817
LM6	.810
LM4	.770
LM5	.764
LM2	.736
LM1	.728

4.4.4 Time Cognitively Engaged

The item analysis indicated that items CE11 and CE14 were poor items and they were subsequently deleted from the scale. The dimensionality analysis performed on the *Time Cognitively Engaged* scale was, therefore, performed without items CE11 and CE14. All the items in the correlation matrix obtained correlations exceeding the .30 cut-off value, except for items CE9 and CE3 which correlated .289, falling below the .30 value. However all the correlations in the correlation matrix were significant ($p < .05$). The *Time Cognitively Engaged* scale obtained a KMO of .953 and it was deduced from the results that H_0 could be rejected, meaning that the correlation matrix was factor analyzable.

In-line with what was hypothesised, the results revealed that only one factor could be extracted since only one factor obtained an eigenvalue greater than 1. The resultant factor structure is shown in Table 4.13. The scree plot, in-line with the above, also suggested that one factor should be extracted. Furthermore, all the items could be considered satisfactory in terms of the proportion of item variance that could be explained by the first factor, they were all larger than .50. The unidimensionality assumption was thus corroborated.

Table 4.13

Rotated factor structure for the Time Cognitively Engaged scale

	Factor
	1
CE1	.794
CE13	.781
CE10	.773
CE16	.767
CE15	.764
CE7	.755
CE2	.752
CE4	.751
CE8	.746
CE5	.722
CE6	.692
CE12	.687
CE9	.639
CE17	.575
CE3	.563

Only 25% of non-redundant residuals obtained absolute values greater than .05 thus suggesting that the rotated factor solution provides a credible explanation for the observed inter-item correlation matrix.

4.4.5 Academic Self-leadership

For this scale the item analysis indicated that items SL8 and SL9 were poor items. These items were subsequently deleted and not included in the dimensionality analysis for this scale. However, even without these poor items the correlation matrix indicated a number of correlations that were smaller than .30 although all of the correlations were significant ($p < .05$). The KMO was larger than .60 (i.e., .90), and the Bartlett's Test of Sphericity indicated that H_0 could be rejected, indicating that the correlation matrix was factor analyzable.

Academic Self-leadership was hypothesised to have three dimensions. However, contrary to what was hypothesised five factors were extracted in terms of the observed correlation matrix, since 5 factors obtained eigenvalues greater than 1. The resultant pattern matrix is shown in Table 4.14. The scree plot also clearly indicated that more than one factor should be extracted. On further examination of the items

that loaded onto the five factors no meaningful identity could be established for the five extracted factors.

Table 4.14

Rotated factor structure for the Academic Self-leadership scale

	Factor				
	1	2	3	4	5
SL23	.871	.012	.005	.034	-.032
SL22	.804	.044	-.029	.064	.044
SL17	.584	.070	-.029	-.087	.152
SL15	.511	.122	-.006	-.156	.127
SL16	.468	.049	.040	-.105	.149
SL4	.383	-.051	.375	-.134	-.039
SL13	-.018	.941	-.054	.035	-.001
SL14	.021	.705	.010	-.068	-.031
SL12	.030	.690	.127	-.002	.034
SL2	-.074	.006	.854	.044	.068
SL1	-.077	.070	.741	-.032	.047
SL3	.107	.074	.622	.006	.006
SL5	.343	-.020	.349	-.208	-.008
SL6	.032	.052	.013	-.821	.014
SL7	.002	.067	-.006	-.779	.028
SL20	.011	.029	-.021	-.011	.704
SL19	-.009	.073	.041	.003	.697
SL18	.116	-.003	.029	.094	.622
SL11	.008	-.031	.099	-.210	.441
SL10	-.018	-.010	.057	-.263	.437
SL21	.317	.048	.121	.036	.369

More specifically, even though three factors were hypothesised the *Academic Self-leadership* construct was developed to be one construct encapsulating all three strategies. It was therefore hypothesised that three factors should emerge from the dimensionality analysis and that these three factors would then be grouped into on more general factor, *Academic Self-leadership*. It was decided to look at *Academic Self-leadership* as a unidimensional construct and then, depending on the results, to take a more refined approach. Due to this, and taking the above into account, the *Academic Self-leadership* items were forced onto one factor. The resultant factor structure is shown in Table 4.15.

Table 4.15

Factor matrix when forcing the extraction of a single factor (Academic Self-leadership)

	Factor
	1
SL15	.710
SL17	.688
SL5	.670
SL21	.668
SL23	.658
SL16	.646
SL22	.645
SL19	.644
SL4	.624
SL6	.619
SL3	.601
SL20	.599
SL2	.592
SL1	.589
SL12	.586
SL7	.576
SL11	.573
SL10	.565
SL18	.564
SL13	.502
SL14	.492

The results indicated that all the items, besides item SL14 which loaded .492, loaded satisfactorily onto one factor. It was consequently decided to delete SL14. The subsequent analysis Academic Self-leadership was then represented by two item composites based on the assumption that the remaining scale items (excluding SL8, SL9 and SL14) load satisfactory on a higher-order factor.

For the 5-factor solution only 11% of non-redundant residuals obtained absolute values greater than .05, suggesting that the rotated factor solution provides quite a credible explanation for the observed inter-item correlation matrix. The 1-factor solution, however, failed to provide a very convincing explanation for the observed correlation matrix in that 86 (40%) of the residual correlations were greater than .05.

4.5 CONCLUSIONS DERIVED FROM THE ITEM AND DIMENSIONALITY ANALYSIS

The purpose of the foregoing analyses was to provide insight into the functioning of the scales of the latent variables included in learning potential structural model as depicted in Figure 3.1. Further to this, the analyses assisted in gaining an understanding about the psychometric integrity of the indicator variables that were tasked to represent each of the latent variables. The results reported in the item and dimensionality analyses provided sufficient justification to combine the surviving items into item parcels as indicated in section 3.6. The item analyses revealed sufficient internal consistency for the latent variable scales. In all cases, the scales achieved alpha values exceeding .80. At a more detailed level, the item statistics revealed that there were some poor items which were flagged and after gaining a basket of evidence incriminating these items, six items were deleted across the five scales. As far as the dimensionality analyses are concerned, three of the scales passed the unidimensionality assumption as was originally hypothesised and two did not. In both instances the items were successfully forced onto a single factor solution. One item was deleted because of an inadequate loading on the extracted single factor.

4.6 DATA SCREENING PRIOR TO CONFIRMATORY FACTOR ANALYSIS AND THE FITTING OF THE STRUCTURAL MODEL

Multivariate statistics in general and structural equation modelling in particular are based on a number of critical assumptions. Before proceeding with the main analyses it was necessary to assess the extent to which the data complies with these assumptions (Tabachnick & Fidell, 2007). Failure of the data to satisfy these assumptions can seriously erode the quality of obtained solutions. The effect of non-normality in particular was considered. The default method of estimation when fitting measurement and structural models to continuous data (maximum likelihood) assumes that the distribution of indicator variables follow a multivariate normal

distribution (Mels, 2003). Failure to satisfy this assumption results in incorrect standard errors and chi-square estimates (Du Toit & Du Toit, 2001; Mels, 2003)

The results of the item and exploratory factor analysis warranted the formation of item parcels for each of the latent variables. Composite variables (i.e., parcels), from even and uneven numbered items, were created with SPSS and imported into PRELIS. The parcels were treated as continuous variables. When using LISREL to evaluate a structural model, the individual items comprising the scales used to operationalize the latent variables comprising the model can be used. This, however, quite often leads to cumbersome comprehensive models in which a large number of model parameters have to be estimated. A solution is to form at least two parcels of indicator variables from the items of each scale used to operationalize the latent variables in the structural model. The multivariate normality of the composite item parcels in this study was evaluated via PRELIS. The results of the tests of univariate and multivariate normality of the learning potential indicator variable distributions are depicted in Tables 4.16 and 4.17.

Table 4.16

Test of univariate normality for learning potential variables before normalisation

Skewness			Kurtosis		Skewness and Kurtosis	
Variable	Z-Score	P-Value	Z-Score	P-Value	Chi-Square	P-Value
P_CE1	-2.370	.018	-.433	.665	5.806	.055
P_CE2	-2.866	.004	-.954	.340	9.122	.010
P_SL1	-2.677	.007	-1.522	.128	9.485	.009
P_SL2	-2.794	.005	-.150	.881	7.827	.020
P_ASE1	-1.611	.107	-1.149	.250	3.917	.141
P_ASE2	-2.785	.005	-.896	.370	8.562	.014
P_LM1	-5.726	.000	-.070	.944	32.792	.000
P_LM2	-6.263	.000	1.034	.301	40.292	.000
P_C1	-2.476	.013	-1.738	.082	9.149	.010
P_C2	-2.391	.017	-.632	.528	6.117	.047
P_ENG	.198	.843	-1.075	.283	1.194	.550
P_AFR	.728	.467	-1.377	.169	2.426	.297
P_MATH	.398	.690	-1.166	.244	1.519	.468

P_CE1 and P_CE2 = Time Cognitively Engaged; P_SL1 and P_SL2 = Academic Self-leadership; P_ASE1 and P_ASE2 = Academic Self-Efficacy; P_LM1 And P_LM2 = Learning Motivation; P_C1 and P_C2 = Conscientiousness; and P_ENG, P_AFR and P_MATH = Learning Performance.

Table 4.17

Test of multivariate normality for learning potential latent variables before normalisation

Skewness			Kurtosis			Skewness and Kurtosis	
Value	**Z-Score**	**P-Value**	**Value**	**Z-Score**	**P-Value**	**Value**	**P-Value**
10.627	9.720	0.000	215.360	8.509	0.000	**166.890**	**0.000**

The chi-square value for skewness and kurtosis indicates that ten of the thirteen indicator variables failed the test of univariate normality ($p < .05$). Furthermore, the null hypothesis that the data follows a multivariate normal distribution also had to be rejected ($X^2 = 166.890$; $p < .05$). Since the quality of the solution obtained in structural equation modelling is to a large extent dependent on multivariate normality, it was decided to normalise the variables through PRELIS. The results of the test for univariate normality on the normalised indicator variables are presented in Table 4.18 and the results of the test for multivariate normality in Table 4.19.

Table 4.18

Test of Univariate Normality for Continuous Variables (after normalisation)

Skewness		Kurtosis		Skewness and Kurtosis		
Variable	Z-Score	P-Value	Z-Score	P-Value	Chi-Square	P-Value
P_CE1	-.031	.975	.004	.997	.001	1.000
P_CE2	-.015	.988	-.002	.998	.000	1.000
P_SL1	-.050	.960	-.029	.976	.003	.998
P_SL2	-.032	.957	.029	.977	.002	.999
P_ASE1	-.225	.822	-.420	.675	.227	.893
P_ASE2	-.178	.859	-.324	.746	.137	.934
P_LM1	-.404	.686	-.549	.583	.465	.792
P_LM2	-.675	.499	-.997	.319	1.451	.484
P_C1	-.063	.950	-.125	.900	.020	.990
P_C2	-.056	.955	-.040	.968	.005	.998
P_ENG	.000	1.000	.070	.944	.005	.998
P_AFR	.000	1.000	.070	.944	.005	.998
P_MATH	.000	1.000	.071	.944	.005	.998

P_CE1 and P_CE2 = Time Cognitively Engaged; P_SL1 and P_SL2 = Academic Self-leadership; P_ASE1 and P_ASE2 = Academic Self-Efficacy; P_LM1 And P_LM2 = Learning Motivation; P_C1 and P_C2 = Conscientiousness; and P_ENG, P_AFR and P_MATH = Learning Performance. P signals item parcels

Table 4.19

Test of multivariate normality for continuous variables (after normalisation)

Skewness			Kurtosis			Skewness and Kurtosis	
Value	Z-Score	P-Value	Value	Z-Score	P-Value	Value	P-Value
11.549	11.265	.000	219.810	9.773	.000	**222.41**	**.000**

Table 4.18 indicates that the normalisation procedure succeeded in rectifying the univariate normality problem on all indicator variables. The p-values of all the sub-scales increased quite substantially as can be seen in Table 4.18. Normalising the data typically does improve the symmetry and kurtosis of the indicator variable distributions. However, Table 4.19 makes it evident that in this particular instance the normalisation of the data actually aggravated the deviation from multivariate normality of the data as the chi-square increased from 166.890 to 222.410.

Maximum likelihood estimation is the default method when fitting the measurement and structural models to continuous data, but it requires the multivariate normality assumption to be satisfied (Mels, 2003). The inappropriate analysis of continuous non-normal variables in structural equation models can result in incorrect standard errors and chi-square estimates (Du Toit & Du Toit, 2001; Mels, 2003). Since the normalization option had less than the desired effect, the use of an alternative method of estimation more suited to data not following a multivariate normal distribution was rather considered. Weighted least squares (WLS), diagonally weighted least squares (DWLS) and robust maximum likelihood (RML) are estimation methods which are appropriate to use in order to fit structural equation models to non-normal data (Du Toit & Du Toit, 2001; Mels, 2003). In accordance with the recommendation by Mels (2003) RML estimation was used in this study. This necessitated the computation of an asymptotic covariance matrix via PRELIS to enable the calculation of more appropriate fit indices in LISREL. For this purpose the original non-normalised data set was utilised due to the detrimental effect that the attempt at normalising the data had on the multivariate indicator variable distribution.

4.7 EVALUATING THE FIT OF THE MEASUREMENT MODEL VIA CONFIRMATORY FACTOR ANALYSIS IN LISREL

The measurement model represents the relationship between the learning potential latent variables and its manifest indicators and is expressed by equation 5:

$$\mathbf{X} = \Lambda_x \xi + \delta \quad \text{---------- } 5$$

The symbol Λ_x represents the matrix of lambda coefficients (λ), which indicate the loading of the indicators on their designated latent variable. The vector of latent variables is signified by the symbol ξ (ksi), whereas the symbol δ (delta) is used to indicate a vector of measurement error terms (Diamantopoulos & Siguaw, 2000). X represents a vector of composite indicator variables. Ultimately, the purpose of the confirmatory factor analysis is to determine whether the operationalization of the latent variables comprising the structural model in terms of item parcels was successful. The operationalization can be considered successful if the measurement model specified in equation 5 can successfully reproduce the observed covariance matrix (i.e., if the model fits well) and if the measurement model parameter estimates indicate that the majority of the variance in the indicator variables can be explained in terms of the latent variables they were tasked to reflect.

The fit of the estimated learning potential measurement model is discussed next. A decision is made on the credibility of the measurement model parameter estimates and the parameters estimates of the fitted model are finally discussed. A visual representation of the fitted learning potential measurement model is provided in Figure 4.1 and the overall fit statistics are presented in Table 4.20.

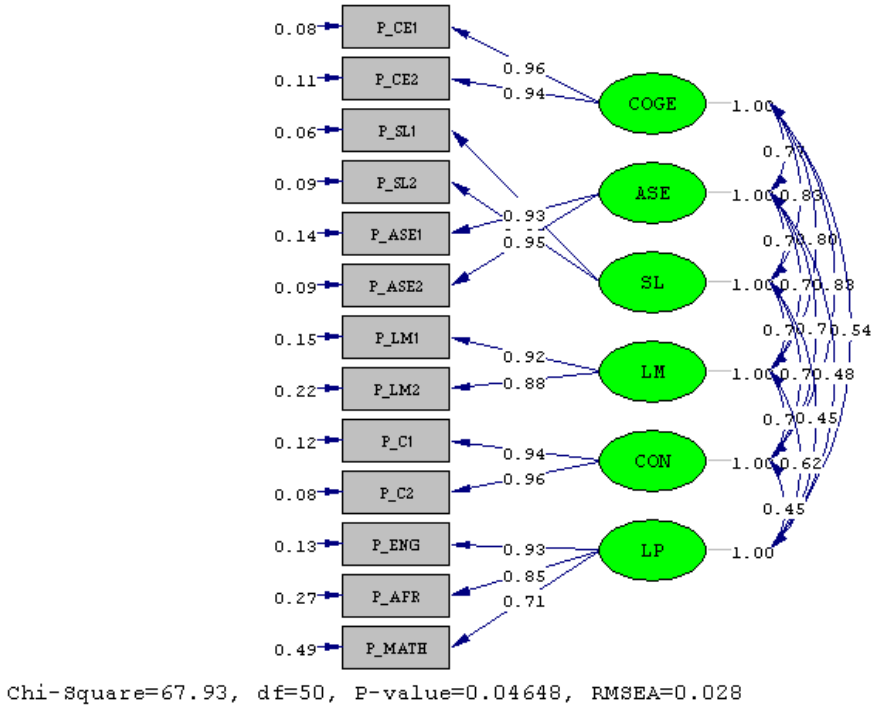

Figure 4.1. **Representation of the fitted Learning Potential Measurement Model**

4.7.1 Measurement model fit indices

The measurement model converged in 6 iterations. The spectrum of fit statistics is shown in Table 4.20.

Table 4.20

Goodness of Fit Statistics for the Learning Potential Measurement Model

Degrees of Freedom	50
Minimum Fit Function Chi-Square	77.542 (P = .00753)
Normal Theory Weighted Least Squares Chi-Square	73.396 (P = .0172)
Satorra-Bentler Scaled Chi-Square	**67.934 (P = .0465)**
Chi-Square Corrected for Non-Normality	104.480 (P = .000)
Estimated Non-centrality Parameter (NCP)	17.934
90 Percent Confidence Interval for NCP	(.318 ; 43.603)
Minimum Fit Function Value	.169
Population Discrepancy Function Value (F0)	.0391
90 Percent Confidence Interval for F0	(.000694 ; .0950)
Root Mean Square Error of Approximation (RMSEA)	**.0280**
90 Percent Confidence Interval for RMSEA	(.00372 ; .0436)
P-Value for Test of Close Fit (RMSEA < 0.05)	**.992**
Expected Cross-Validation Index (ECVI)	.327
90 Percent Confidence Interval for ECVI	(.288 ; .383)
ECVI for Saturated Model	.397
ECVI for Independence Model	29.718
Chi-Square for Independence Model with 78 Degrees of Freedom	13614.528
Independence AIC	13640.528
Model AIC	149.934
Saturated AIC	182.000
Independence CAIC	13707.234
Model CAIC	360.315
Saturated CAIC	648.942
Normed Fit Index (NFI)	.995
Non-Normed Fit Index (NNFI)	.998
Parsimony Normed Fit Index (PNFI)	.638
Comparative Fit Index (CFI)	.999
Incremental Fit Index (IFI)	.999
Relative Fit Index (RFI)	.992
Critical N (CN)	515.561
Root Mean Square Residual (RMR)	**.0172**
Standardized RMR	**.0176**
Goodness of Fit Index (GFI)	.976
Adjusted Goodness of Fit Index (AGFI)	.956
Parsimony Goodness of Fit Index (PGFI)	.536

The following exact fit null hypothesis was tested:

$$H_{01}: \text{RMSEA} = 0$$

$$H_{a1}: \text{RMSEA} > 0$$

The following close fit null hypothesis was also tested:

$$H_{02}: \text{RMSEA} \leq .05$$

$$H_{a2}: \text{RMSEA} > .05$$

The Satorra-Bentler scaled chi-square returned a value of 67.934 (p = .0465). The null hypothesis of the exact model fit (H_{01}: RMSEA = 0) was consequently not rejected. This implies that the measurement model has the ability to reproduce the observed co-variance matrix to a degree of accuracy explainable in terms of sampling error only. The root mean square residual (RMR) of .0172 which represents the average value of the residual matrix (S-Sˆ) and the standardized RMR, which represents the

fitted residual divided by their estimated standard errors .0176 also indicated good fit.

The minimum fit function chi-square (computed as (*N* -1) *Fmin*, where *N* is the sample size and *Fmin* is the value of the fitting function at convergence) value comes to 77.542 with 50 degrees of freedom (calculated as ½k(k+1)-t, where k equals the number of observed variables and t equals the number of parameters to be estimated) yielding a highly significant result ($p < .00$). This implies that the model fits the data well.

An indication of the model fit achieved is also depicted by the extent to which the minimum fit function value approaches zero and it was found to be .169 therefore indicating a good fit. The estimated population discrepancy function value *(F0)* reflects the extent to which the observed population co-variance matrix (Σ) is estimated to differ from the reproduced population co-variance resulting from the parameters minimizing the selected discrepancy function fitting the model on Σ. In this case a point estimate of .0391 was obtained for *F0* with confidence interval limits of (.000694; .0950). A perfect or exact model fit would have been achieved if *F0* had been zero because the observed population co-variance matrix (Σ) would then have been equal to the estimated population co-variance matrix (Σ^) (C.C. Theron, personal communication, 5 September 2011). The root mean square error of approximation (RMSEA) indexes the discrepancy between the observed population co-variance matrix and the estimated population co-variance matrix implied by the model per degree of freedom. Values below .05 are generally regarded as indicative of good model fit, values above .05 but less than .08 as indicative of reasonable fit; values greater than or equal to .08 but less than .10 indicative of mediocre fit and values exceeding .10 are generally regarded as indicative of poor fit. The RMSEA value of .0280 indicates that the measurement model shows very good model fit. The fact that the upper bound of the confidence interval falls below the critical cut off value of .05 moreover indicates that the null hypothesis of close fit would not be rejected. The p-Value for Test of Close Fit (H_{02}: RMSEA < .05) was .992. The close

fit null hypothesis therefore was not rejected ($p > .05$) and thus it is concluded that the measurement model shows very good fit.

4.7.2 Examination of Measurement Model Residuals

Residuals refer to the differences between corresponding cells in the observed and fitted covariance/correlation matrices (Jöreskog & Sörbom, 1993). Jöreskog and Sörbom (1993) explain that a standardised residual refers to a residual that is divided by its estimated standard error. Standardized residuals can be considered large if they exceed +2.58 or –2.58 (Diamantopoulos & Siguaw, 2000). Residuals should also be distributed approximately symmetrical around zero. Residuals, and especially standardised residuals, provide diagnostic information on sources of lack of fit in models (Jöreskog & Sörbom, 1993; Kelloway, 1998). Positive residuals indicate underestimation and thus imply the need for additional explanatory paths. Negative residuals indicate overestimation and thus suggest the need to prune paths away (C.C. Theron, 2010, personal communication, 7 September 2011). Table 4.21 provides a summary of the standardised residuals obtained for this analysis.

Table 4.21 indicates 5 large positive residuals. This means that only 5 out of 91 (5.5%) unique observed variance-covariances terms were poorly estimated by the fitted model. This small percentage of large residuals again comments favourably on the fit of the model. The covariance terms that were substantially underestimated each time involve measures of *Learning Performance* and measures of two learning potential latent variables (*Time Cognitively Engaged* and *Academic Self-leadership*) that were hypothesised to affect *Learning Performance*. A possible explanation for the four large positive residuals, therefore, could be the fact that the measurement model fails to model the structural relationships that exist between these latent variables.

Table 4.21

Summary Statistics for Learning Potential Measurement Model Standardized Residuals

Description	Value
Smallest Standardized Residual	-1.725
Median Standardized Residual	.000
Largest Standardized Residual	4.579
Residual for P_AFR and P_CE1	4.232
Residual for P_AFR and P_CE2	4.579
Residual for P_AFR and P_SL1	3.812
Residual for P_AFR and P_SL2	2.686

Jöreskog and Sörbom (1993) state that all the standardised residuals may be examined collectively in a stem-and-leaf plot and a Q-plot. The stem-and-leaf plot of the learning potential measurement model is depicted in Figure 4.2. A good model is characterised by a stem-and-leaf plot in which the residuals are distributed approximately symmetrical around zero. An excess of residuals on the positive or negative side would indicate that the covariance terms are systematically under or overestimated.

```
- 1|76431
- 0|875543221000000000000000000000000000000000000000000000000000000
  0|12244446778899
  1|44
  2|57
  3|68
  4|26
```

***Figure 4.2*. Stem-And-Leaf Plot of Learning Potential Measurement Model Standardized Residuals**

From the stem-and-leaf plot depicted in Figure 4.2, the distribution of standardised residuals appears positively skewed. This further indicates that, in terms of substantial estimation errors, the measurement model tends to underestimate rather than overestimate the observed covariance matrix.

The Q-plot of the learning potential measurement model is depicted in Figure 4.3. When interpreting the Q-plot it is important to note the extent to which the data points fall on the 45-degree reference line. If the points fall on the 45-degree reference line, it would be indicative of good model fit (Jöreskog & Sörbom, 1993). To the extent that the data points swivel away from the 45-degree reference line the model fit is less than satisfactory. The Q-plot in Figure 4.3 clearly indicates a less than perfect model fit as the standardised residuals of pairs of observed variables tend to deviate from the 45-degree reference line and but only really so in the upper region of the X-axis. This is in-line with the results reported in Table 4.21 and Figure 4.2 where large positive standardised residuals were found to dominate. Subsequently, given the examination of the residuals, it is important to also evaluate the measurement model modification indices.

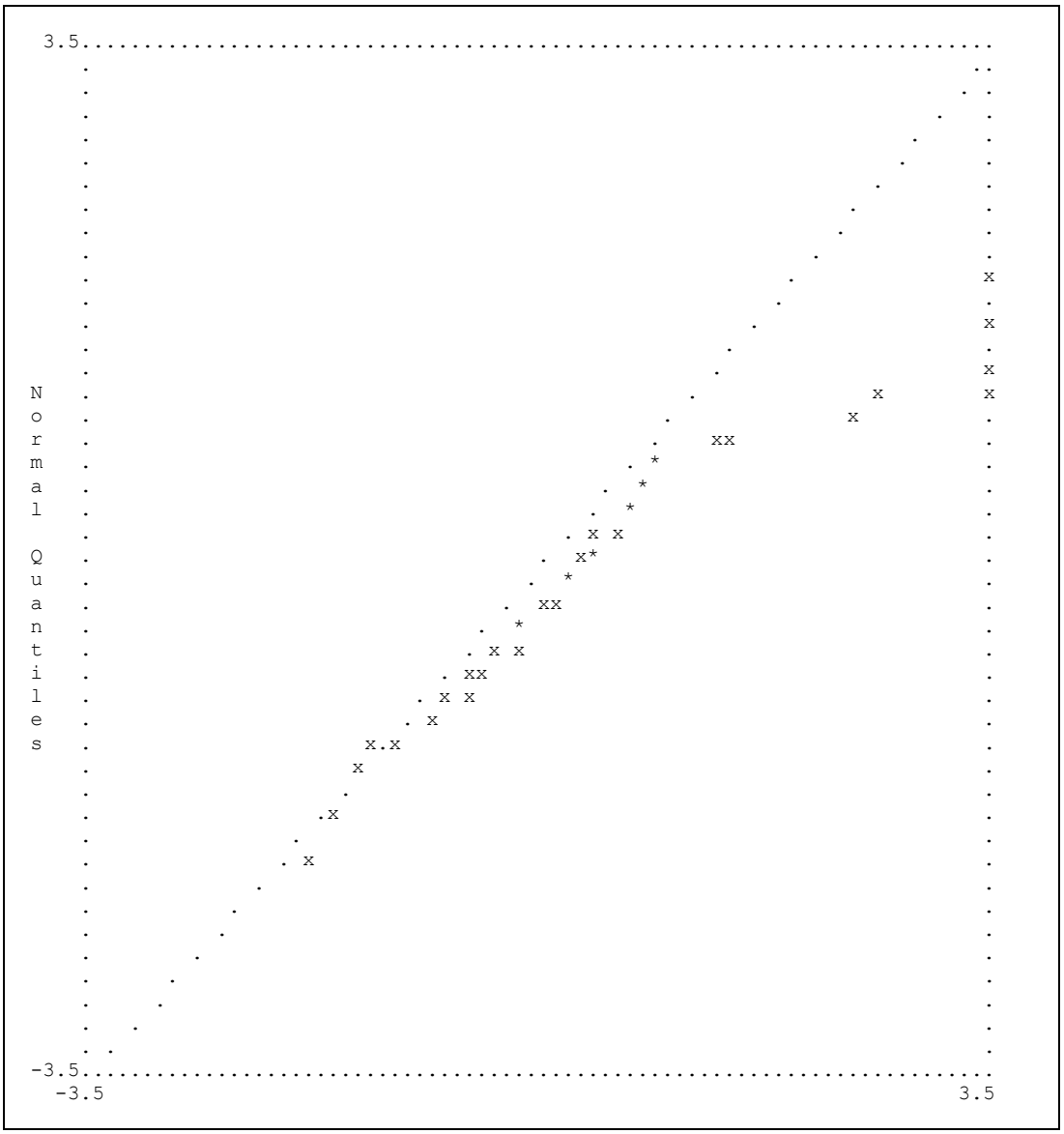

***Figure 4.3*. Q-plot of Learning Potential Measurement Model Standardized Residuals**

4.7.3 Learning Potential Measurement Model Modification Indices

Model modification indices are aimed at answering the question whether any of the currently fixed parameters, when freed in the model, would significantly improve the parsimonious fit of the model. Modification indices (MI) indicate the extent to which

the χ^2 fit statistic will decrease if a currently fixed parameter in the model is freed and the model re-estimated (Jöreskog & Sörbom, 1993). Large modification index values (> 6.6349) would be indicative of parameters that, if set free, would improve the fit of the model significantly ($p < .01$) (Diamantopoulos & Siguaw, 2000; Jöreskog & Sörbom, 1993). In the evaluation of the modification indices calculated for Λ_X and Θ_δ the emphases does not fall as much on possible ways of actually modifying the measurement model as it still falls on evaluating the fit of the model. If only a limited number of ways exist to improve the fit of the model this comments favourably on the fit of the current model.

Examination of the modification index values calculated for the Λ_X matrix shown in Table 4.22, indicates that the *Academic Self-efficacy*, *Learning Motivation* as well as English marks and Afrikaans marks (*Learning Performance*) also load onto the construct of *Time Cognitively Engaged*. Afrikaans marks (*Learning Performance*) also appeared to load onto *Academic Self-leadership* and *Conscientiousness*. English marks (*Learning Performance*) was also shown to load onto *Learning Motivation* and *Conscientiousness*. Table 4.21 suggests that these additional paths would significantly improve the fit of the model. The important point here is the fact that only 8 out of a possible 65 ways of modifying the factor loading pattern (12.3%) will result in a significant improvement in model fit. This small percentage comments favourably on the fit of the model.

Table 4.22

Modification Indices of Learning Potential Measurement Model for LAMBDA-X

Variable	COGE	ASE	SL	LM	CON	LP
P_CE1	-	.198	3.735	.539	.467	3.313
P_CE2	-	.164	3.217	.611	0.416	3.474
P_SL1	.300	.876	-	.567	.246	.177
P_SL2	.665	.983	-	.717	.341	.193
P_ASE1	3.676	-	1.424	1.569	.879	2.806
P_ASE2	**13.290**	-	3.538	2.282	2.661	2.522
P_LM1	2.037	.945	.720	-	.134	2.769
P_LM2	**8.168**	2.859	1.851	-	.320	2.993
P_C1	.743	2.538	.001	.001	-	.047
P_C2	1.011	3.635	.001	.001	-	.048
P_ENG	**11.678**	1.387	5.575	**10.146**	**10.787**	-
P_AFR	**7.207**	1.155	**8.484**	5.011	**9.162**	-
P_MATH	.066	.000	.733	.107	.107	-

COGE = Time Cognitively Engaged ASE = Academic Self-Efficacy, SL = Academic Self-leadership, LM = Learning Motivation, CON = Conscientiousness, LP = Learning Performance

P_CE1 and P_CE2 = Time Cognitively Engaged; P_SL1 and P_SL2 = Academic Self-leadership; P_ASE1 and P_ASE2 = Academic Self-Efficacy; P_LM1 And P_LM2 = Learning Motivation; P_C1 and P_C2 = Conscientiousness; and P_ENG, P_AFR and P_MATH = Learning Performance. P signals item parcels.

As can be seen from Table 4.23 none of the modification index values calculated for the measurement error variance-covariance matrix Θ_δ were large (> 6,6349) and therefore none of the parameters, if set free, would improve the fit of the model significantly ($p < .01$).

The fact that none of the one hundred and fifty-six covariance terms in Θ_δ currently fixed to zero would, if set free, significantly improve the fit of the model, once again reflects very favourably on the fit of the measurement model

Table 4.23

Modification index values calculated for the Θ_δ matrix

	P_CE1	P_CE2	P_SL1	P_SL2	P_ASE 1	P_ASE 2	P_LM1	P_LM2	P_C1	P_C2	P_ENG	P_AFR	P_MATH
P_CE1	-												
P_CE2	-	-											
P_SL1	.178	.007	-										
P_SL2	.546	1.761	-	-									
P_ASE1	.024	4.447	2.890	.217	-								
P_ASE2	.264	5.625	1.054	.029	-	-							
P_LM1	2.670	.078	.319	.761	1.337	3.100	-						
P_LM2	1.679	.646	2.436	.000	2.486	4.885	-	-					
P_C1	1.403	.115	1.274	1.335	.210	3.034	.154	.000	-				
P_C2	3.935	1.395	2.244	2.366	.024	1.969	.019	.070	-	-			
P_ENG	.059	.091	.114	.188	.078	.523	2.503	2.459	1.431	.048	-		
P_AFR	.352	.511	.027	1.239	3.539	.253	.067	.121	.616	.177	-	-	
P_MATH	.178	1.637	.191	2.938	.021	.000	.005	.089	.921	.078	4.128	5.229	-

P_CE1 and P_CE2 = Time Cognitively Engaged; P_SL1 and P_SL2 = Academic Self-leadership; P_ASE1 and P_ASE2 = Academic Self-Efficacy; P_LM1 And P_LM2 = Learning Motivation; P_C1 and P_C2 = Conscientiousness; and P_ENG, P_AFR and P_MATH = Learning Performance. P signals item parcels.

The limited number of large positive standardised residuals in conjunction with the limited number of large modification index values shown in Tables 4.22 and 4.23 comments very favourably on the fit of the measurement model. It is possible that some of these findings could be accounted for by the fact that the measurement model does not model the structural relations existing between the learning competency potential latent variables, the learning competency latent variables and the learning performance latent variable.

4.7.4 Decision on the Fit of the Measurement Model

Integrating the available evidence on the fit of the measurement model points to a model that fits the data well. The fit statistics in Table 4.20 generally indicate a good fitting model. Only a small percentage of large positive standardised residuals exist. A limited number of large modification index values exist in Λ_X and none in Θ_δ. The measurement model parameter estimates therefore may be regarded as credible in as far as it is possible to reasonably accurately reproduce the observed covariance's from them. The interpretation of the measurement model parameter estimates is therefore regarded as permissible.

4.8 INTERPRETATION OF THE LEARNING POTENTIAL MEASUREMENT MODEL PARAMETER ESTIMATES

Through the examination of the magnitude and the statistical significance of the slope of the regression of the observed variables on their respective latent variables an indication of the validity of the measures is obtained. In other words, if a measure is designed to provide a valid reflection of a specific latent variable, then the slope of the regression of X_i on ξ_j in the fitted measurement model has to be substantial and significant (Diamantopoulos & Siguaw, 2000). The unstandardized Λ_x (see Table 4.24 below) matrix contains the regression coefficients of the regression of the manifest variables on the latent variables they were linked to. The regression coefficients of the manifest variables on the latent variables are significant ($p < .05$) if the t-values, as indicated in the matrix, exceed |1,96|. Significant indicator loadings provide validity evidence in favour of the indicators (Diamantopoulos & Siguaw, 2000).

Table 4.24

Learning Potential measurement Model Unstandardized Lambda-X Matrix

	COGE	ASE	SL	LM	CON	LP
P_CE1	.901 (.032) 28.379	- - -	- - -	- - -	- - -	- -
P_CE2	.936 (.034) 27.779					
P_SL1			.888 (.029) 30.750			
P_SL2			.844 (.031) 27.674			
P_ASE1		.975 (.036) 27.196				
P_ASE2		.926 (.034) 27.474				
P_LM1				.993 (.039) 25.393		
P-LM2				.998 (.046) 21.572		
P-C1					1.079 (.037) 29.189	
P_C2					1.023 (.036) 28.257	
P_ENG						.898 (0.33) 27.193
P_AFR						.818 (.034) 23.893
P_MATH						.671 (.038) 17.652
P_CE1	.901 (.032) 28.379					
P_CE2	.936 (.034) 27.779					
P_SL1			.888 (.029) 30.750			
P_SL2			.844 (.031) 27.674			
P_ASE1		.975 (.036) 27.196				
P_ASE2		.926 (.034) 27.474				
P_LM1				.993 (.039) 25.393		
P_LM2				.998 (.046) 21.572		
P_C1					1.079 (.037) 29.189	
P_C2					1.023 (.036)	

	28.257	
P_ENG		.898 (.033) 27.193
P_AFR		.818 (.034) 23.893
P_MATH		.671 (.038) 17.652

COGE = Time Cognitively Engaged ASE = Academic Self-Efficacy, SL = Academic Self-leadership, LM = Learning Motivation, LP = Learning Performance.

P_CE1 and P_CE2 = Time Cognitively Engaged; P_SL1 and P_SL2 = Academic Self-leadership; P_ASE1 and P_ASE2 = Academic Self-Efficacy; P_LM1 And P_LM2 = Learning Motivation; P_C1 and P_C2 = Conscientiousness; and P_ENG, P_AFR and P_MATH = Learning Performance. P signals item parcels.

As is evident from Table 4.24, all the factor loadings, indicated in the Lambda-X matrix, are significant with t > |1,96|. However, Diamantopoulos and Siguaw (2000) warn that there is indeed a problem with solely relying on unstandardized loadings and their associated t-values. The problem is that it might be hard to compare the validity of different indicators measuring a particular construct. Diamantopoulos and Siguaw (2000) recommend that the magnitudes of the standardised loadings should also be investigated. This is done by examining the *completely standardised solution*, also available in the LISREL output, in which both latent and manifest variables have been standardized. The completely standardized factor loading matrix is presented in Table 4.25. The values shown in Table 4.25 could be interpreted as the regression slopes of the regression of the standardized indicator variables on the standardized latent variables. The completely standardized factor loadings therefore indicate the average change expressed in standard deviation units in the indicator variable associated with one standard deviation change in the latent variable. The square of the completely standardized factor loadings indicates the proportion of indicator variance explained in terms of the latent variable it is meant to express (Diamantopoulos & Siguaw, 2000).

Table 4.25

Learning Potential Measurement Model Completely Standardized Solution Lambda-X

	COGE	ASE	SL	LM	CON	LP
P_CE1	.957	-	-	-	-	-
P_CE2	.941	-	-	-	-	-
P_SL1	-	-	.971	-	-	-
P_SL2	-	-	.952	-	-	-
P_ASE1	-	.927	-	-	-	-
P_ASE2	-	.954	-	-	-	-
	-	-	-	-.924	-	-
P_LM2	-	-	-	.884	-	-
P_C1	-	-	-	-	.938	-
P_C2	-	-	-	-	.957	-
P_ENG	-	-	-	-	-	.931
P_AFR	-	-	-	-	-	.853
P_MATH	-	-	-	-	-	.714

COGE = Time Cognitively Engaged ASE = Academic Self-Efficacy, SL = Academic Self-leadership, LM = Learning Motivation, LP = Learning Performance.

P_CE1 and P_CE2 = Time Cognitively Engaged; P_SL1 and P_SL2 = Academic Self-leadership; P_ASE1 and P_ASE2 = Academic Self-Efficacy; P_LM1 And P_LM2 = Learning Motivation; P_C1 and P_C2 = Conscientiousness; and P_ENG, P_AFR and P_MATH = Learning Performance. P signals item parcels.

Since each indicator only loads on a single latent variable the squared completely standardized loadings equal the R^2 values shown below in Table 4.26. The squared multiple correlations (R^2) of the indicators depicted in Table 4.26 show the proportion of variance in an indicator that is explained by its underlying latent variable. A high R^2 value would indicate that variance in the indicator in question, to a large degree, reflects variance in the latent variable to which it has been linked. The rest of the variance, not explained by the latent variable, can be ascribed to systematic and random measurement error (Diamantopoulos & Siguaw, 2000). The mathematics measure (P_Math) that served as an indicator variable for *Learning Performance* is the only indicator that can be regarded problematic to some degree. Even for this indicator though more than half of the variance is explained by the latent variable it was meant to reflect.

Table 4.26

Learning Potential Measurement Model Squared Multiple Correlations for X – Variables

P_CE1	P_CE2	P_SL1	P_SL2	P_ASE1	P_ASE2	P_LM1	P_LM2	P_C1	P_C2	P_ENG	P_AFR	P_MATH
.917	.886	.944	.906	.859	.909	.854	.781	.880	.916	.866	.727	.510

P_CE1 and P_CE2 = Time Cognitively Engaged; P_SL1 and P_SL2 = Academic Self-leadership; P_ASE1 and P_ASE2 = Academic Self-Efficacy; P_LM1 And P_LM2 = Learning Motivation; P_C1 and P_C2 = Conscientiousness; and P_ENG, P_AFR and P_MATH = Learning Performance. P signals item parcels.

The completely standardized error variance of the ith indicator variable ($\theta_{\delta ii}$) in Table 4.27 consists of systematic non-relevant variance and random error variance. The values shown in Table 4.26 could therefore be interpreted as indicator variable validity coefficients, $\rho(X_i,\xi_j)$. Since ($\lambda_{ij}^2 + \theta_{\delta ii}$) are equal to unity in the completely standardized solution, the validity coefficients, $\rho(X_i,\xi_j)$ can be defined as follows:

$\rho(X_i,\xi_j) = \sigma^2_{\text{systematic-relevant}}/(\sigma^2_{\text{systematic-relevant}} + \sigma^2_{\text{non-relevant}})$

$= \lambda_{ij}^2/[\lambda_{ij}^2 + \theta_{\delta ii}]$

$= 1 - (\theta_{\delta i}/[\lambda_{ij}^2 + \theta_{\delta ii}])$

$= 1 - \theta_{\delta ii}$

$= \lambda_{ij}^2$ ----------6

Since reliability could be defined as the extent to which variance in indicator variables can be attributed to systematic sources, irrespective of whether the source of variance is relevant to the measurement intention or not, the values shown in Table 4.26 could simultaneously be interpreted as lower bound estimates of the item reliabilities ρ_{ii} (Diamantopoulos & Siguaw, 2000; Jöreskog & Sörbom, 1996a). The extent to which the true item reliabilities would be under-estimated would be determined by the extent to which δ_{ii} contains the effect of the systematic non-relevant latent influences. In terms of the foregoing argument the values of the squared multiple correlations for the indicator variables shown in Table 4.26 are all, but for that of P_Math, very satisfactory and appear to adequately reflect variance in the latent variables they are meant to reflect. Except for P_Math, all indicators explain more than 70% of variance in the latent variables they were meant to reflect.

The latent variables therefore appear to succeed quite well in explaining variance in the indicator variables in which they are meant to express themselves.

Table 4.27

Learning Potential Measurement Model Completely Standardized Theta-Delta Matrix

P_CE1	P_CE2	P_SL1	P_SL2	P_ASE1	P_ASE2	P_LM1	P_LM2	P_C1	P_C2	P_ENG	P_AFR	P_MATH
.083	.114	.056	.094	.141	.091	.146	.219	.120	.084	.134	.273	.490

P_CE1 and P_CE2 = Time Cognitively Engaged; P_SL1 and P_SL2 = Academic Self-leadership; P_ASE1 and P_ASE2 = Academic Self-Efficacy; P_LM1 And P_LM2 = Learning Motivation; P_C1 and P_C2 = Conscientiousness; and P_ENG, P_AFR and P_MATH = Learning Performance. P signals item parcels.

4.8.1 Decision on the Success of the Operationalization

The measurement model showed good fit. All the indicator variables loaded statistically significantly ($p < .05$) on the latent variables they were tasked to reflect. All but one of the composite indicator variables were in excess of 70% of the variance they were designed to represent. Measurement error variances, although significant ($p < .05$), were generally small. It is therefore concluded that the operationalization of the latent variables comprising the structural model was successful. It therefore will be possible to derive an unambiguous verdict on the fit of the structural model from the fit of the comprehensive LISREL model. Should the comprehensive LISREL model fit poorly it inevitably will mean that problems exist in the structural model.

4.9 ASSESSING THE OVERALL GOODNESS-OF-FIT OF THE STRUCTURAL MODEL

As the measurement model showed good fit and the indicator variables generally reflected their designated latent variables well, the structural relationships between

latent variables hypothesised by the proposed model depicted in Figure 3.1 were tested via SEM.

Equation 7 denotes the structural part of the model:

$$\boldsymbol{\eta = B\eta + \Gamma\xi + \zeta} \quad \text{----------} 7$$

The symbol **B** represents a matrix containing the β (beta) parameters, describing the slope of the regression of η_i on η_j. **Γ** is a matrix containing the γ (gamma) parameters, describing the slope of the regression of η_i on ξ_j (Diamantopoulos & Siguaw, 2000). **ζ** (psi) represents a vector of structural error terms linked to the endogenous (η; eta) variables.

When this model was fitted to the data, the solution failed to converge. The preliminary output provided by LISREL indicated that the structural error variance estimate (PS 4_4) associated with the *Learning Motivation* latent variable 'may not be identified'. Increasing the number of iterations did not solve the problem. It was subsequently decided to delete one of the paths which involved the *Learning Motivation* latent variable in a somewhat desperate attempt to solve the deadlock. The hypothesised impact of *Learning Motivation* on *Academic Self-leadership,* hypothesis 7 (p. 51), was considered to be the least convincing path in the theoretical argument presented in Chapter 3. It was consequently decided to delete this path and to refit the model.

An admissible final solution of parameter estimates for the revised reduced learning potential structural model was obtained after 16 iterations. The full spectrum of fit indices provided by LISREL to assess the absolute fit of the model is presented in Table 4.28.

Table 4.28

Goodness of Fit Statistics for the Learning Potential Structural Model

Degrees of Freedom	53
Minimum Fit Function Chi-Square	116.927 (P = .000)
Normal Theory Weighted Least Squares Chi-Square	112.837 (P = .000)
Satorra-Bentler Scaled Chi-Square	**105.178 (P = .000)**
Chi-Square Corrected for Non-Normality	142.791 (P = .00)
Estimated Non-centrality Parameter (NCP)	52.178
90 Percent Confidence Interval for NCP	(26.816 ; 85.326)
Minimum Fit Function Value =	0.255
Population Discrepancy Function Value (F0)	.114
90 Percent Confidence Interval for F0	(.0584 ; .186)
Root Mean Square Error of Approximation (RMSEA)	**.0463**
90 Percent Confidence Interval for RMSEA	**(.0332 ; .0592)**
P-Value for Test of Close Fit (RMSEA < 0.05)	.664
Expected Cross-Validation Index (ECVI)	**.395**
90 Percent Confidence Interval for ECVI	(.339 ; .467)
ECVI for Saturated Model	.397
ECVI for Independence Model	29.718
Chi-Square for Independence Model with 78 Degrees of Freedom	13614.528
Independence AIC	13640.528
Model AIC	181.178
Saturated AIC	182.000
Independence CAIC	13707.234
Model CAIC	376.165
Saturated CAIC	648.942
Normed Fit Index (NFI)	.992
Non-Normed Fit Index (NNFI)	.994
Parsimony Normed Fit Index (PNFI)	.674
Comparative Fit Index (CFI)	.996
Incremental Fit Index (IFI)	.996
Relative Fit Index (RFI)	.989
Critical N (CN)	349.441
Root Mean Square Residual (RMR)	**.0352**
Standardized RMR	**.0342**
Goodness of Fit Index (GFI)	.964
Adjusted Goodness of Fit Index (AGFI)	.937
Parsimony Goodness of Fit Index (PGFI)	.561

The p-value associated with the Satorra-Bentler χ^2 value in Table 4.28 clearly indicates a significant test statistic. A non-significant χ^2 indicates model fit in that the model can reproduce the observed covariance matrix to a degree of accuracy that can be explained in terms of sampling error only (Kelloway, 1998). In this case, the model is not able to reproduce the observed covariance matrix sufficiently accurately to allow the discrepancy to be attributed to sampling error only. H_{02a}: RMSEA = 0 is therefore rejected in favour of H_{a2a}: RMSEA > 0.

The RMSEA value of .0463 indicates good fit as values less than .05 indicate good fit. The 90% confidence interval for RMSEA shown in Table 4.28 (.0332; .0592) includes the critical .05 value, indicating reasonable to good fit. A test of the

significance of the obtained value is performed by LISREL by testing H_{02b}: RMSEA < .05 against H_{a2b}: RMSEA > .05. Table 4.28 indicates that the obtained RMSEA value of .0463 is not significantly different from the target value of .05 (i.e., H_{02b} is not rejected; p > .05) and since the confidence interval does include the target value of .05, it is therefore concluded that a close fit has been achieved.

The RMR value of .0352 and standardised RMR value of .0342 also indicate good fit. Values less than .05 on the latter indices are regarded as indicative of a model that fits the data well (Kelloway, 1998).

However a further investigation revealed that paths could be added/deleted and that through this the learning potential structural model's fit will be improved. The **B**-matrix reflecting the statistical significance of the β_{ij} estimates is depicted in Table 4.29.

Table 4.29

Learning Potential Structural Model Unstandardized Beta Matrix

	ASE	LM	COGE	SL	LP
ASE	-	-	.142	.746	0.97
	-	-	(.108)	(.118)	(.044)
	-	-	1.316	6.348	2.194
LM	.400	-	-	.300	-
	(.057)	-	-	(.064)	-
	6.968	-	-	4.717	-
COGE	-	.255	-	.391	-
	-	(0.58)	-	(.062)	-
	-	4.358	-	6.305	-
SL	-.555	-	-	-	-
	(.166)	-	-	-	-
	-3.336	-	-	-	-
LP	-	-	.558	-	-
	-	-	(.045)	-	-
	-	-	12.491	-	-

COGE = Time Cognitively Engaged ASE = Academic Self-Efficacy, SL = Academic Self-leadership, LM = Learning Motivation, LP = Learning Performance.

From Table 4.29, it is evident that the hypothesis that *Time Cognitively Engaged* positively influences *Academic Self-efficacy* was not supported. The t-value

obtained, 1.316, is smaller than 1.96 and the β_{21} estimate is therefore not statistically significant ($p < .05$). H_{014} therefore cannot be rejected. No support is therefore found for hypothesis 13 that *Academic Self-efficacy* positively influences *Learning Motivation.* Besides this insignificant relationship all the other hypotheses were supported. H_{03}, H_{05}, H_{07} – H_{011}, H_{013}, and H_{015} therefore were not rejected. Support therefore was obtained for hypotheses 2, 4, 6 – 9, 12, and hypothesis 14. The sign associated with β_{41} was in disagreement with the proposed direction of the effect of *Academic Sef-efficacy* on *Academic-Self-leadership*. Hypothesis 10 was therefore not corroborated despite the significant path coefficient and the path was removed.

Table 4.30 provides the results of the unstandarized gamma matrix. As can be seen in Table 4.25 none of the t-values were found to be smaller than 1.96 and all the relationships were therefore found to be significant ($p < .05$). It was concluded that H_{04}, H_{06} and H_{012} should not be rejected.

Table 4.30

Learning Potential Structural Model Unstandardized Gamma Matrix

	CON
ASE	-
LM	.216
	(.063)
	3.409
COGE	.329
	(.051)
	6.393
SL	1.213
	(.136)
	8.928
LP	-

COGE = Time Cognitively Engaged ASE = Academic Self-Efficacy, SL = Academic Self-leadership, LM = Learning Motivation, LP = Learning Performance.

The modification index values calculated for **B** are shown in Table 4.31. Table 4.31 reveals two currently fixed paths that, if freed, would statistically significantly ($p < .01$) improve the fit of the structural model. The theoretical meaningfulness of the proposed paths are critical in considering the possibility of freeing currently fixed parameters. Jöreskog and Sörbom (1993) argue that modification indices should be used in the following way in the process of model evaluation and modification:

> If chi-square is large relative to the degrees of freedom, one examines the modification indices and relaxes the parameter with the largest modification index *if this parameter can be interpreted substantively*. If it does not make sense to relax the parameter with the largest modification index, one considers the second largest modification index etc. If the signs of certain parameters are specified a priori, positive or negative, the expected parameter changes associated with the modification indices for these parameters can be used to exclude models with parameters having the wrong sign (p. 127).

Table 4.31

Learning Potential Structural Model Modification Indices for Beta

	ASE	LM	COGE	SL	LP
ASE	-	1.470	-	-	-
LM	-	-	.387	-	**33.523**
COGE	.025	-	-	-	3.470
SL	-	-	-	-	.538
LP	.146	**24.804**	-	.209	-

COGE = Time Cognitively Engaged ASE = Academic Self-Efficacy, SL = Academic Self-leadership, LM = Learning Motivation, LP = Learning Performance.

The Modification Indices for **B** indicates the reduction in the Satorra-Bentler chi square that would be achieved if currently fixed elements of the beta matrix would be freed. Values greater than 6.64 would indicate a significant ($p < .01$) improvement in model fit. As is evident from Table 4.31 a path from *Learning Performance* to *Learning Motivation* could be added and through the addition of this path, the model fit should be improved. The critical question is whether the proposed path makes substantive sense. If it does not, it should not be considered as a possible modification to the model. However a path between *Learning Performance* and *Learning Motivation* did seem to make theoretical sense. If a learner performs well on a learning task he or she may be more motivated to learn, assuming that high learning performance is intrinsically rewarding. Achieving success in the learning task should increase the expectancy that effort will translate to performance (i.e., P(E→P)) and thereby increase motivation (Vroom, 1964). There was a feedback loop hypothesised in the hypothesised learning potential structural model (Figure 2.2) from *Learning Performance* to *Academic Self-efficacy*. However the more direct

path from *Learning Performance* to *Learning Motivation* did appear to make constitutive sense.

It should also be noted that the results indicated that there could be a relationship where *Learning Motivation* directly affects *Learning Performance*. This relationship makes sense and was considered in the theorising. However, it is the author's opinion that this relationship is more complex and should be mediated by *Time Cognitively Engaged* as depicted in the learning potential structural model. This is because the individual's behaviour is put into motion via *Time Cognitively Engaged* and it is *Time Cognitively Engaged* that then ultimately positively influences *Learning Performance*. In addition, according to the procedure suggested by Jöreskog and Sörbom (1993), currently constrained paths should be freed one at a time as any change to the existing structural model will affect all existing parameter estimates and also all modification index values. Paths that will currently improve the fit of the model will therefore not necessarily do so in the revised model.

The modification index values calculated for Γ are shown in Table 4.32. None of the modification index values in Table 4.32 were greater than 6.64 and therefore the freeing any of these fixed elements would not lead to a significant ($p < .01$) improvement in model fit.

Table 4.32

Learning Potential Structural Model Modification Indices for Gamma

	CON
ASE	-
LM	-
COGE	-
SL	-
LP	.094-

COGE = Time Cognitively Engaged ASE = Academic Self-Efficacy, SL = Academic Self-leadership, LM = Learning Motivation, LP = Learning Performance.

Table 4.33 provides the standardised expected change for the beta matrix.

Table 4.33

Learning Potential Structural Model Standardized Expected Change for B

	ASE	LM	COGE	SL	LP
ASE	-	-.156	-	-	-
LM	-	-	.804	-	.230
COGE	-.014	-	-	-	-.060
SL	-	-	-	-	.042
LP	**.401**	**.401**	-	.039	-

COGE = Time Cognitively Engaged ASE = Academic Self-Efficacy, SL = Academic Self-leadership, LM = Learning Motivation, LP = Learning Performance

The standardized expected change for the beta-matrix is depicted in Table 4.33. Table 4.33 indicates the estimated standardized beta coefficient that would be achieved if a currently fixed path would be freed. It is indicated that a modest relationship may be obtained if the path between *Learning performance* and *Learning Motivation* would be freed.

After reviewing the results of the modification indices obtained for the learning potential structural model it was decided to remove the path from *Time Cognitively Engaged* to *Academic Self-efficacy,* as well as add a path from *Learning Performance* to *Learning Motivation* and re-run the analysis.

4.10 ASSESSING THE OVERALL GOODNESS-OF-FIT OF THE MODIFIED LEARNING POTENTIAL STRUCTURAL MODEL

4. 10.1 Overall fit assessment

An admissible final solution of parameter estimates for the modified learning potential structural model was obtained after 18 iterations. The completely standardised solution for the comprehensive LISREL model is depicted in Figure 4.4. The full spectrum of fit indices provided by LISREL to assess the absolute fit of the model is presented in Table 4.34.

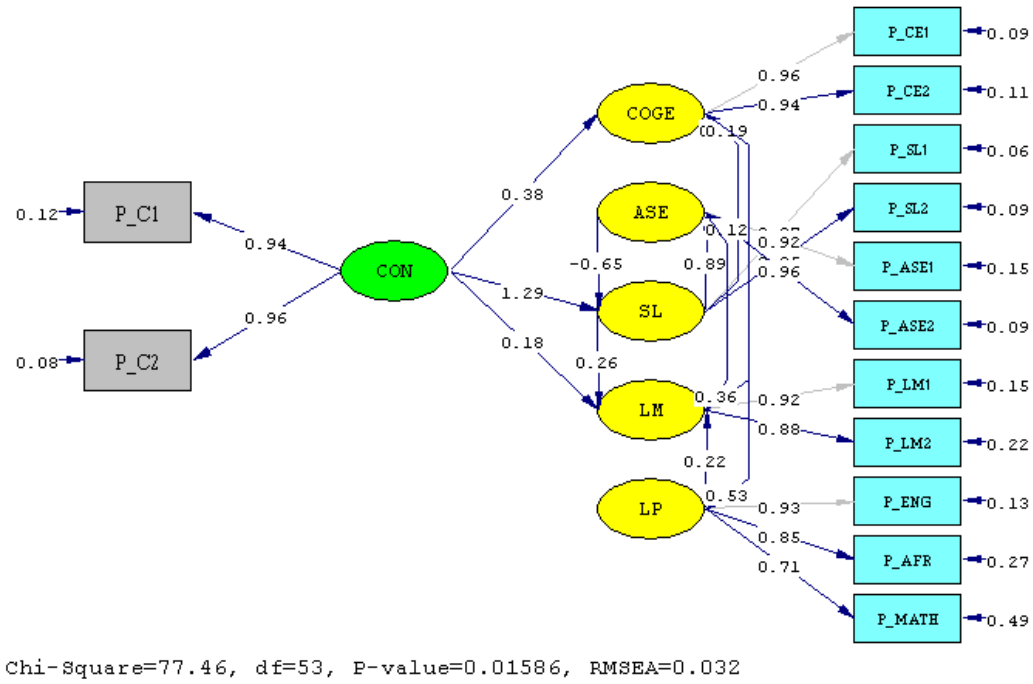

***Figure 4.4*. Representation of the modified Learning Potential Structural model**

Table 4.34 provides the results of the goodness-of-fit statistics of the learning potential structural model after the suggested changes were implemented.

Table 4.34

Goodness-Of-Fit Statistics for the Learning Potential Structural Model

Degrees of Freedom	53
Minimum Fit Function Chi-Square	85.795 (P = .00291)
Normal Theory Weighted Least Squares Chi-Square	83.159 (P = .00510)
Satorra-Bentler Scaled Chi-Square	**77.462 (P = .0159)**
Chi-Square Corrected for Non-Normality	111.523 (P = .000)
Estimated Non-centrality Parameter (NCP)	24.462
90 Percent Confidence Interval for NCP	(4.889 ; 52.023)
Minimum Fit Function Value	.187
Population Discrepancy Function Value (F0)	.0533
90 Percent Confidence Interval for F0	(.0107 ; .113)
Root Mean Square Error of Approximation (RMSEA)	**.0317**
90 Percent Confidence Interval for RMSEA	(.0142 ; .0462)
P-Value for Test of Close Fit (RMSEA < 0.05)	**.983**
Expected Cross-Validation Index (ECVI)	**.334**
90 Percent Confidence Interval for ECVI	(.292 ; .394)
ECVI for Saturated Model	**.397**
ECVI for Independence Model	**29.718**
Chi-Square for Independence Model with 78 Degrees of Freedom	13614.528
Independence AIC	**13640.528**
Model AIC	**153.462**
Saturated AIC	**182.000**
Independence CAIC	**13707.234**
Model CAIC	**348.449**
Saturated CAIC	**648.942**
Normed Fit Index (NFI)	.994
Non-Normed Fit Index (NNFI)	.997
Parsimony Normed Fit Index (PNFI)	.676
Comparative Fit Index (CFI)	.998
Incremental Fit Index (IFI)	.998
Relative Fit Index (RFI)	.992
Critical N (CN)	474.111
Root Mean Square Residual (RMR)	**.0216**
Standardized RMR	**.0223**
Goodness of Fit Index (GFI)	**.973**
Adjusted Goodness of Fit Index (AGFI)	**.953**
Parsimony Goodness of Fit Index (PGFI)	.567

The p-value associated with the Satorra-Bentler χ^2 value in Table 4.34 clearly indicates a significant test statistic. In this case, it is clear that the model is not able to reproduce the observed covariance matrix to a degree of accuracy that can be attributed to sampling error only. H_{02a}: RMSEA = 0[41] is therefore rejected in favour of H_{a2a}: RMSEA > 0. The RMSEA value of .0317 indicates good fit, as values less than .05 indicate good fit. The 90% confidence interval for RMSEA shown in Table 4.34 (.0142; .0462) is below the critical .05 value, also indicating good fitting model. A test of the significance of the obtained value is performed by LISREL by testing H_{02b}: RMSEA < .05 against H_{a2b}: RMSEA > .05. Table 4.34 indicates that the obtained RMSEA value of .0317 is not significantly different from the target value of .05 (i.e., H_{02b} is not rejected; p > .05).

[41] Strictly speaking the exact fit hypothesis being tested here is not the same as the exact fit hypothesis formulated on the structural model depicted in Figure 3.1.

The RMR (.057) and standardised RMR .0223, also indicate good fit as values of less than .05 on the latter statistic are regarded as indicative of a model that fits the data well (Kelloway, 1998). The goodness-of-fit index (GFI) (.973) and the adjusted GFI (AGFI) (.953) both indicate good fit as values exceeding .90 indicates good fit to the data (Jöreskog & Sörbom, 1993; Kelloway, 1998).

The assessment of parsimonious fit acknowledges that model fit can always be improved by adding more paths to the model and estimating more parameters until perfect fit is achieved in the form of a saturated or just-identified model with no degrees of freedom (Kelloway, 1998). The objective in model building is, however, to achieve satisfactory fit with as few model parameters as possible (Jöreskog & Sörbom, 1993). The objective is therefore to find, in this sense, the most parsimonious model.

Indices of parsimonious fit relate the benefit that accrues in terms of improved fit to the cost incurred, in terms of degrees of freedom lost, to affect the improvement in fit (Jöreskog & Sörbom, 1993). The values for the Aiken information criterion (153.462) shown in Table 4.34 suggest that the fitted structural model provides a more parsimonious fit than the independent model (13640.528) as well as the saturated model (182.000), since smaller values on these indices indicate a more parsimonious model (Kelloway, 1998). The values for the consistent Aiken information criterion (348.449) also suggest that the fitted structural model provides a more parsimonious fit than both the independent model (13707.234) and the saturated model (648.942).

The expected cross-validation index (ECVI) expresses the difference between the reproduced sample covariance matrix ($\hat{\Sigma}$) derived from fitting the model on the sample at hand and the expected covariance matrix that would be obtained in an independent sample of the same size from the same population (Diamantopoulos & Siguaw, 2000). Since the model ECVI (.334) is smaller than the value obtained for the independence model (29.718), and smaller than the ECVI value associated with the saturated model (.397), a model resembling the fitted model seems to have a

better chance of being replicated in a cross-validation sample than the independence model or the saturated model. This finding is echoed by the Aiken information criterion and the consistent Aiken information criterion results. The proposed learning potential structural model therefore does not seem to be overly elaborate in how it conceptualizes the causal processes amongst the learning potential latent variables, nor does the proposed model seem to under-represent the causal processes.

After interpreting all the fit indices, the conclusion can be drawn that the structural model fits the data well. Integrating the results obtained on the full spectrum of fit statistics depicted in Table 4.34 seems to suggest a well fitting model that clearly outperforms the independence model and that seems to acknowledge the true complexity of the processes underlying what and how the learning potential latent variables contribute to learning performance.

However, to ensure a thorough assessment of the fit of the structural model it is necessary to also investigate the standardised residuals and the modification indices[42] to determine the extent of success with which the model explains the observed covariances amongst the manifest variables (Jöreskog & Sörbom, 1993).

4.10.2 Examination of the Learning Potential Structural Model Residuals

As two alterations were made to the learning potential structural model based on the residuals that resulted in a model that showed quite good fit, as judged by the spectrum of fit statistics (Table 4.34), one would not expect to see many large positive or large negative residuals. The standardized residuals resulting from the covariance estimates derived from the estimated model parameters obtained for the modified model are shown in Table 4.35.

[42] Inspection of the modification indices for Γ and B will serve the dual purpose of commenting on the fit of the model as well as suggesting possible further model improvements.

Table 4.35

Adapted Learning Potential Structural Model Standardized Residuals

	P_CE1	P_CE2	P_SL1	P_SL2	P_ASE1	P_ASE2	P_LM1	P_LM2	P_C1	P_C2	P_ENG	P_AFR	P_MATH
P_CE1	-												
P_CE2	-	-											
P_SL1	-	-	-										
P_SL2	.256	-	-	-									
P_ASE1	1.958	2.369	-	.062	-								
P_ASE2	1.154	.723	-	.643	-	-							
P_LM1	-.777	-.278	.925	.906	.249	-.203	-						
P_LM2	.713	.864	-.491	-.050	.115	.879	.328	.321					
P_C1	-	-	-	-	-	-	-	.253	-				
P_C2	-	-	-	-	-	-	-.008	.145	-	-			
P_ENG	-	-	-	1.975	1.246	-	-	-	1.100	-1.655	-		
P_AFR	3.416	4.255	3.622	3.578	.895	3.343	6.286	2.610	2.278	2.093	-	-	
P_MATH	-.616	1.156	.329	-.413	.319	1.143	1.409	-.485	.890	.416	-	-	--

P_CE1 and P_CE2 = Time Cognitively Engaged; P_SL1 and P_SL2 = Academic Self-leadership; P_ASE1 and P_ASE2 = Academic Self-Efficacy; P_LM1 And P_LM2 = Learning Motivation; P_C1 and P_C2 = Conscientiousness; and P_ENG, P_AFR and P_MATH = Learning Performance. P signals item parcels.

As can be seen from Table 4.35 there are only seven covariance terms in the observed sample covariance matrix that are substantially underestimated. Worthy of note is that they all involve P_AFR as a measure of *Learning Performance*.

The stem-and-leaf plot and the Q-plot are depicted in Figures 4.5 and 4.6. A good fitting model would be characterised by a stem-and-leaf plot in which the residuals are distributed approximately symmetrical around zero and with minimal spread.

```
 - 1|71
 - 0|865543200000000000000000000000000000000000000000000
   0|11123333334677999999
   1|12224
   2|001346
   3|3466
   4|2
```

***Figure 4.5*. Modified Learning Potential Structural Model Stem-And-Leaf Plot of Standardized Residuals**

From the stem-and-leaf plot depicted in Figure 4.5, the distribution of the standardised residuals appears to be slightly positively skewed. The estimated model parameters therefore tend to underestimate the observed covariance terms more than they tend to overestimate them.

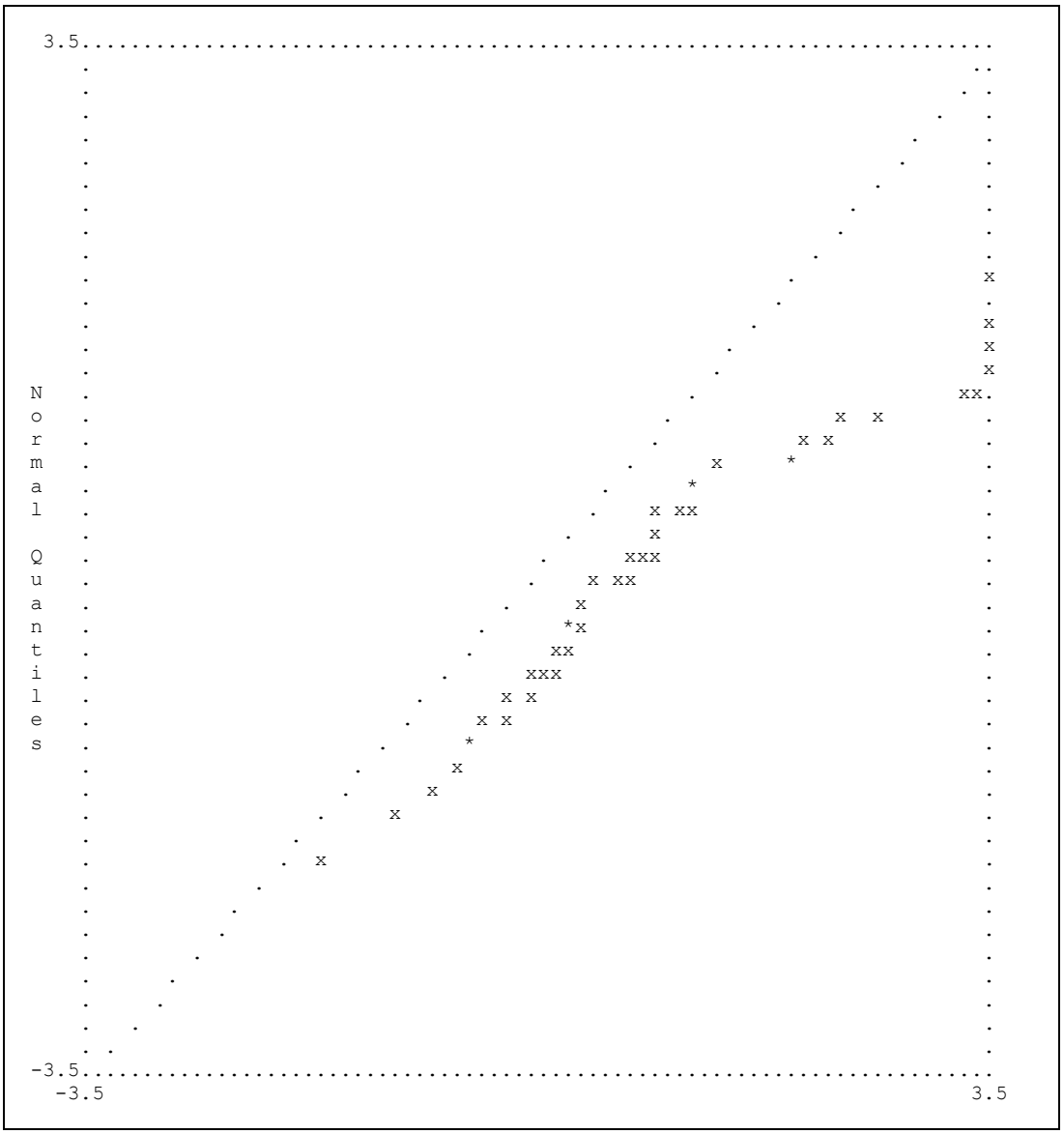

***Figure 4.6*. Learning Potential Structural Model Q-Plot of Standardized Residuals**

As can be seen from Figure 4.6 the data deviates somewhat from the 45- degree reference line which reflects negatively on the fit of the model. However, the model fit appears to be quite satisfactory as the data points only swivel away from the 45-degree reference line at the upper end in a positive direction.

4.10.3 Direct Effects in the Learning Potential Structural Model

Since the learning potential structural model fits the data well, as judged by the overall goodness-of-fit measures and the distribution of standardised residuals, the structural model was further evaluated. The aim of further assessing the structural model was to determine whether each of the hypothesized theoretical relationships is supported by the data (Diamantopoulos & Siguaw, 2000).

Diamantopoulos and Siguaw (2000) identify four issues relevant to assessing the structural model. First, it is important to assess whether the signs of the parameters representing the paths between latent variables are in agreement with the nature of the causal effect hypothesised to exist between the latent variables. Secondly, it is important to assess whether the parameter estimates are significant ($p < .05$). Thirdly, assuming significance, it is important to assess the magnitude of the parameter estimates indicating the strength of the hypothesized relationships. Lastly, it is important to evaluate the squared multiple correlations (R^2), indicating the amount of variance in each endogenous latent variable that is explained by the latent variables linked to it in terms of the hypothesized structural model.

The parameters of interest in assessing the structural model are the freed elements of the Γ and B matrices. The unstandardized Γ matrix depicted in Table 4.36, is used to assess the significance of the estimated path coefficients γi_j, expressing the strength of the influence of ξ_j on η_i. These parameters are significant ($p < .05$) if $t > |1{,}96|$ (Diamantopoulos & Siguaw, 2000). A significant γ estimate would imply that the corresponding null hypothesis will be rejected in favour of the relevant alternative hypothesis[43]. The hypotheses which are relevant to the Γ matrix in this study are H_{04}, H_{06} and H_{012}.

[43] Strictly speaking the statistical path hypotheses tested here are not identical to those formulated in paragraph 3.3.The path coefficients are partial regression coefficients. They therefore reflect the effect of one latent variable on another when holding constant the other latent variables in the model. Since one path has been removed from the original model and one additional path has been added, the strict interpretation of β_{ij} and γ_{pq} will differ across the two models.

Table 4.36

Learning Potential Structural Model Unstandardized Gamma (Γ) Matrix

	CON
ASE	-
LM	.177
	(.060)
	2.925
COGE	.377
	(.051)
	7.344
SL	1.287
	(.134)
	9.612
LP	-

COGE = Time Cognitively Engaged ASE = Academic Self-Efficacy, SL = Academic Self-leadership, LM = Learning Motivation, LP = Learning Performance.

As is evident from Table 4.36, all the t-values are greater than $|1{,}96|$ and all are positive, which is in-line with the nature of the hypothesised effects. More specifically Table 4.36 indicates that, the null hypothesis, that *Conscientiousness* (ξ_1) has a statistically significant effect on *Time Cognitively Engaged* (η_4) (H_{04}:γ_{31}= 0) can be rejected in favour of H_{a4}:γ_{31} > 0. Thus, the relationship postulated between *Conscientiousness* (ξ_1) and *Time Cognitively Engaged* (η_4) in the structural model, is corroborated. Table 4.36 further indicates that *Conscientiousness* (ξ_1) has a statistically significant positive effect on *Academic Self-leadership* (η_5) and H_{012}: γ_{41} = 0 can therefore be rejected. Further, H_{06}:γ_{21} = 0 can be rejected in favour of H_{a6}:γ_{21} > 0 thereby providing support for the causal relationship hypothesized between *Conscientiousness* (ξ_1) and *Learning Motivation* (η_3).

The unstandardized **B** matrix, shown in Table 4.37, is used to assess the significance of the estimated path coefficients β_{ij}, expressing the strength of the influence of η_j on η_i. Unstandardized β_{ij} estimates are also significant ($p < .05$) if $t > |1{,}96|$ (Diamantopoulos & Siguaw, 2000). A significant β estimate would imply that the corresponding H_0-hypothesis should be rejected in favour of the relevant H_a-hypothesis.

Table 4.37

Learning Potential Structural Model Beta (B) Matrix

	ASE	LM	COGE	SL	LP
ASE				.886	.119
				(.055)	(.042)
				16.008	2.835
LM	.363			.261	.223
	(.053)			(.057)	(.034)
	6.826			4.557	6.573
COGE		.191		.394	
		(.056)		(.054)	
		3.397		7.335	
SL	-.651				
	(.159)				
	-4.101				
LP			0.530		
			(0.046)		
			11.523		

COGE = Time Cognitively Engaged ASE = Academic Self-Efficacy, SL = Academic Self-leadership, LM = Learning Motivation, LP = Learning Performance.

The values in Table 4.37 indicate that all the null hypotheses formulated with regards to **B** paths were supported except for H_{010}. All paths were supported except for the path between *Academic Self-efficacy* and *Academic Self-leadership*.

Learning Performance (η_6) was found to be positively determined by the extent to which learners spend *Time Cognitively Engaged* (η_4) in their studies. $H_{03:}\beta_{53} = 0$ can therefore be rejected in favour of $H_{a3:}\gamma_{53} > 0$. Thus the relationship postulated between *Time Cognitively Engaged* (η_4) and *Learning Performance* (η_6) in the learning potential structural model is corroborated. In addition, the sign associated with the significant β_{53} parameter estimate is consistent with the nature of the relationship hypothesised to exist between these two latent variables. Table 4.37 further indicates that the null hypothesis, $H_{011}:\beta_{41} = 0$, that *Academic Self-efficacy* (η_1) does not have a statistically significant effect on *Academic Self-leadership* (η_5) can be rejected. However the sign associated with β_{32}, is not in the hypothesised direction. It was originally hypothesised that an increase in *Academic Self-efficacy*,

the belief in ones academic ability, would lead to an increased use of *Academic Self-leadership*. Table 4.37, however, clearly indicates that the relationship is negative. Hypothesis 10 is therefore not supported. A negative relationship between *Academic Self-efficacy* and *Academic Self-leadership* does, however, to some degree make theoretical sense. For example, it could be argued that if an individual believes that s/he is capable of succeeding in an academic or learning task, that individual may not see the need to implement academic self-leadership strategies as the individual may feel that s/he is capable of performing successfully without the implementation of these strategies.

Table 4.37 furthermore indicates that the null hypothesis, $H_{014}:\beta_{21} = 0$, that *Academic Self-efficacy* (η_1) has no statistically significant effect on *Learning Motivation* (η_3), can also be rejected in favour of $H_{a14}:\beta_{21} > 0$. A significant ($p < .05$) relationship is therefore evident between *Academic Self-efficacy* (η_1) and *Learning Motivation* (η_3). The sign of β_{21} is in the hypothesised direction. This finding, however, begs the question why a negative relationship was found only between *Academic Self-efficacy* and *Academic Self-leadership* and not also between *Academic Self-efficacy* and *Learning Motivation*. If the logic put forward applies to the negative relationship found between *Academic Self-efficacy* and *Academic Self-leadership* it should also apply to the relationship between *Academic Self-efficacy* and *Learning Motivation*. To further explain, if an individual is confident in his or her ability to perform an academic or learning task s/he may not see the need to exert effort to cognitively engage with the learning material. Expectancy theory (Vroom, 1964) would, however, argue that the level of motivation to perform well in a task depends on the valence of high performance[44] and the expectancy that effort exerted in attempting to perform the task will be met with success (i.e., $P(E \rightarrow P)$). The effort-performance expectancy can in turn be expected to depend on the degree of self-efficacy. Increases in *Academic Self-efficacy* can therefore be expected to have a positive impact on the subjective probability that effort exerted in attempting to perform the task will be met with success. Increases in *Academic Self-efficacy* should, therefore,

[44] The valence associated with high performance in turn depends on the valence of the salient outcomes associated with high performance and the instrumentality of high performance in achieving those outcomes (i.e., $P(P \rightarrow O_i)$)

in terms of this line of reasoning, be expected to have a positive impact on *Learning Motivation.*

Table 4.37, in addition, also indicates that the causal relationships hypothesized between *Academic Self-leadership* and *Time Cognitively Engaged*, between *Academic Self-leadership* and *Academic Self-efficacy* and between *Academic Self-leadership* and *Learning Motivation* are also all corroborated. Therefore hypothesis H_{09}: β_{34}= 0 was rejected in favour of H_{a9}: $\beta_{34} > 0$, H_{010}:β_{14} = 0 was rejected in favour of H_{a10}:$\beta_{14} > 0$; and H_{07}: β_{24}= 0 was rejected in favour of H_{a7}: $\beta_{24} > 0$. In addition, H_{05}:β_{32} = 0 was also rejected in favour of H_{a5}:$\beta_{32} > 0$ indicating that *Learning Motivation* positively influences *Time Cognitively Engaged* as is evident from Table 4.37. Furthermore, the two feedback loops that were hypothesised were also corroborated. As can be seen in Table 4.37 the hypotheses that *Learning Performance* positively influences *Academic Self-efficacy* and positively influences *Learning Motivation*[45] were supported and the signs obtained were in the hypothesised direction.

4.10.4 Completely Standardised Solution

Diamantopoulos and Siguaw (2000) suggest that additional insights can be obtained by considering the completely standardised Γ and B parameter estimates provided by LISREL. The completely standardised Γ and B parameter estimates are not affected by differences in the unit of measurement of the latent variables and can thus be compared across equations. The completely standardised Γ and B parameter estimates reflect the average change, expressed in standard deviation units, in the endogenous latent variables, directly resulting from a one standard deviation change in an endogenous or exogenous latent variable to which it has been linked, holding the effect of all other variables constant (Diamantopoulos & Siguaw, 2000). The completely standardised Γ and B parameter estimates are depicted in Tables 4.38 and 4.39.

Table 4.38

Learning Potential Structural Model Completely Standardized Beta Estimates

	ASE	LM	COGE	SL	LP
ASE				.886	.119
LM	.363			.261	.223
COGE		.191		.394	
SL	-.651				
LP			.530		

COGE = Time Cognitively Engaged ASE = Academic Self-Efficacy, SL = Academic Self-leadership, LM = Learning Motivation, LP = Learning Performance

Table 4.39

Learning Potential Structural Model Completely Standardized Gamma Estimates

	CON
ASE	-
LM	.177
COGE	.377
SL	1.287
LP	-

COGE = Time Cognitively Engaged ASE = Academic Self-Efficacy, SL = Academic Self-leadership, LM = Learning Motivation, LP = Learning Performance

Table 4.38 and Table 4.39 indicate that of the significant effects, the effect of *Academic Self-leadership* on *Academic Self-efficacy* is the most pronounced, followed by the effect of *Conscientiousness* on *Academic Self-leadership*. The negative relationship between *Academic Self-efficacy* and *Academic Self-leadership* also appears to be reasonably robust when compared with the magnitude of the other estimates in Tables 4.38 and 4.39.

The fact that the completely standardised γ_{41} estimate exceeds unity is, however, to some degree worrying. Mels (2000) argues that completely standardised γ and β structural coefficients cannot exceed unity. Structural coefficients are regression coefficients. In a simple linear regression model, in which both the dependent and

[45] It should be noted that, as mentioned, no hypothesis was originally formulated for the feedback loop from *Learning Performance* to *Learning Motivation*. This path was added after the analysis was run due to the results obtained from the analysis.

independent variables have been standardised to have a mean of zero and a standard deviation of one, the regression slope is equal to the correlation between the dependent and independent variable. In-line with this argument, the correlation cannot exceed unity.

However, in most structural models the structural relations have to be expressed as multiple regression equations. Jöreskog and Sörbom (1999) argue that in the case were endogenous latent variables having multiple determinants in the model, structural coefficients can exceed unity. In a technical report posted on the Scientific International website Jöreskog (1999, p. 1) stated:

> A common misunderstanding is that the coefficients in the completely standardized solution must be smaller than one in magnitude and if they are not, something must be wrong. However, this need not be so. … The misunderstanding probably stems from classical exploratory factor analysis where factor loadings are correlations if a correlation matrix is analyzed and the factors are standardized and uncorrelated (orthogonal). However, if the factors are correlated (oblique), the factor loadings are regression coefficients and not correlations as such they can be larger than one in magnitude. This can indeed happen also for any factor loading or structural coefficient in any LISREL model. Users who are only interested in this issue from a practical point of view can stop reading here. Just remember that a standardised coefficient of 1.04, 1.40 or even 2.8 does not necessarily imply that something is wrong.

In the same technical report Jöreskog (1999, p. 1), however, then continued to warn that in cases where structural coefficients do exceed unity 'it might suggest that there is a high degree of multicollinearity in the data.' It should be noted that although the warning in the initial fitting of the structural model was directed at *Learning Motivation*, the path that was eliminated was the path from *Learning Motivation* to *Academic Self-leadership*. The inter-latent variable correlation matrix shown in Table 4.40 for the model depicted in Figure 3.1 does suggest that a number of latent variables included in this model, are quite strongly related.

Table 4.40

Inter-Latent Variable Correlation Matrix for the Learning Potential Structural Model

	COGE	ASE	SL	LM	LP	CON
COGE	1.000					
ASE	.741	1.000				
SL	.834	.750	1.000			
LM	.803	.794	.764	1.000		
LP	.548	.446	.407	.594	1.000	
CON	.835	.757	.795	.758	.442	1.000

COGE = Time Cognitively Engaged ASE = Academic Self-Efficacy, SL = Academic Self-leadership, LM = Learning Motivation, LP = Learning Performance.

4.10.5 Variance explained in the endogenous latent variables

Table 4.41 indicates the R^2 values for the five endogenous latent variables. R^2 signifies the proportion of the variance in the endogenous latent variable that is accounted for by the learning potential structural model. As is evident from Table 4.41 the learning potential structural model successfully accounts for the variance in *Time Cognitively Engaged* followed by *Learning Motivation* and *Academic Self-Efficacy*. The learning potential structural model was less successful in explaining variance in *Academic Self-leadership* and in *Learning Performance*. The latter finding is especially important. The fact that the more cognitively orientated learning competencies (*Transfer of Knowledge* and *Automatization*) were excluded from the current structural model, as well as the cognitive learning competency potential latent variables (*Information Processing Capacity* and *Abstract Thinking Capacity*) should, however, be taken into account when interpreting the latter finding.

Table 4.41

R^2 values for the Five Endogenous Latent Variables Included in the Learning Potential Structural Model

COGE	ASE	SL	LM	LP
.800	.550	.258	.760	.300

COGE = Time Cognitively Engaged ASE = Academic Self-Efficacy, SL = Academic Self-leadership, LM = Learning Motivation, LP = Learning Performance.

4.10.6 Structural Model Modification Indices

The learning potential structural model depicted in Figure 4.4 seems to fit the data well. The foregoing analysis of the standardised residuals does imply that the addition of one or more paths would improve the fit of the model. However, examination of the modification indices calculated for the B matrix, depicted in Table 4.42, revealed that no additional paths between any endogenous latent variables would significantly improve the fit of the proposed learning potential structural model. Worthy of note is the fact that the direct path that was suggested in Table 4.31 between *Learning Motivation* and *Learning Performance* no longer would significantly improve the fit of the modified structural model.

Table 4.42

Learning Potential Structural Model Modification Indices Calculated for the B Matrix

	ASE	LM	COGE	SL	LP
ASE		.008	2.968		
LM					
COGE	3.876				2.366
SL					1.631
LP	.966	1.171		3.182	

COGE = Time Cognitively Engaged ASE = Academic Self-Efficacy, SL = Academic Self-leadership, LM = Learning Motivation, LP = Learning Performance.

Examination of the modification indices calculated for the Γ matrix depicted in Table 4.43 also suggests that there exists no reason to argue for the inclusion of additional paths between any exogenous latent variable and any endogenous latent variable

that would significantly improve the fit of the proposed learning potential structural model.

Table 4.43

Adapted Learning Potential Structural Model Modification Indices Calculated for the Γ Matrix

	CON
ASE	-
LM	-
COGE	-
SL	-
LP	.336

COGE = Time Cognitively Engaged ASE = Academic Self-Efficacy, SL = Academic Self-leadership, LM = Learning Motivation, LP = Learning Performance.

However, inspection of the modification indices calculated for the Ψ matrix depicted in Table 4.44 indicates one very large modification index value for ψ_{52}. Allowing the structural error terms associated with *Academic Self-leadership* and *Learning Performance* to correlate will significantly improve the fit of the structural model.

Table 4.44

Adapted Learning Potential Structural Model Modification Indices Calculated for the Ψ Matrix

	COGE	ASE	SL	LM	LP
COGE	-				
ASE	6.602	-			
SL	4.374	.656	-		
LM	.702	-	-	-	
LP	2.852	**163.026**	1.104	.066	-

COGE = Time Cognitively Engaged ASE = Academic Self-Efficacy, SL = Academic Self-leadership, LM = Learning Motivation, LP = Learning Performance.

The comprehensive LISREL model was fitted under the assumption that the structural error terms are uncorrelated. Table 4.44 suggest that if this assumption was relaxed and if ζ_2 and ζ_5 were allowed to correlate the fit of the structural model would increase significantly ($p < .01$). This would allow the structural error terms associated with *Academic Self-efficacy* and *Learning Performance* to correlate. This

would imply that a common latent variable (or set of latent variables), currently not included in the model, affects both *Academic Self-leadership* and *Learning Performance.* Alternatively it suggests that a latent variable, currently not included in the model that causes variance in *Academic Self-leadership* is also causally related to a second latent variable currently excluded from the model that affects *Learning Performance*. *Learning Performance* already affects *Academic Self-efficacy* in the current model. Table 4.42 does not suggest a direct path between *Academic Self-efficacy* and *Learning Performance.* Rather it suggests the presence of one or more unspecified common latent variables. Some of these could be the cognitive competency potential latent variables that were excluded from the reduced model (Figure 3.3). Speculation of this nature is however not sufficient to warrant the freeing of ψ_{52}.

4.11 POWER ASSESSMENT

When evaluating the findings on the fit of a model it is very important to investigate the statistical power associated with testing the model. Statistical power refers to the conditional probability of rejecting the null hypothesis given that it is false (P[reject H_0: RMSEA $= 0$|H_0 false]). In the context of SEM, statistical power therefore refers to the probability of rejecting an incorrect model. Diamantopoulos and Siguaw (2000) explain:

> When we test a model's fit by, say, the chi-square test, we emphasize the probability of making a Type I error, i.e., rejecting a correct model; this probability is captured by the significance level, α which is usually set at .05. A significant chi-square result indicates that *if* the null hypothesis is true (i.e., the model is correct in the population), then the probability of incorrectly rejecting it is low (i.e., less than five times out of 100 if α = .05). However, another error that can occur is *not* to reject an incorrect model. This type of error is known as Type II error and the probability associated with it is denoted as β. The probability of avoiding a Type II error is, therefore, 1- β and it is this probability that indicates the power of our test; thus the power of the test tells us how likely it is that a false null hypothesis (i.e., incorrect model) will be rejected (p. 93).

Unfortunately, this issue is more often than not neglected, but it is important to understand that any model evaluation would be incomplete if power considerations were ignored. The importance of conducting a power analysis stems from the critical role that sample size plays in the decisions made in model testing (Diamantopoulos & Siguaw, 2000). Specifically in large samples (i.e., high power) the decision to reject a null hypothesis of exact fit, or a null hypothesis of close fit, becomes problematic because it is not clear whether the model was rejected because of severe misspecifications in the model, or due to the too high sensitivity of the test to detect even minor flaws in the model. Conversely in small samples (i.e., low power) the decision not to reject the null hypothesis of exact/close fit results in ambiguity because it is not clear whether the decision was due to the accuracy of the model, or to the insensitivity of the test to detect specification errors in the model. When the chi-square test is applied only Type I errors are explicitly taken into account. A power analysis therefore must be undertaken to also account for the probability of Type II errors (Diamantopoulos & Siguaw, 2000).

Two types of power calculations were performed. First, the power associated with a test of exact fit (i.e., testing the null hypothesis that the model fits perfectly in the population, as done by the Satorra-Bentler chi-square test) was estimated. However, as argued earlier, this test is very limited since models are only approximations of reality and, therefore, rarely do they fit exactly in the population. The power associated with a test of close fit was consequently also estimated. Here the null hypothesis states that the model has a close, but imperfect fit in the population. The stated null hypothesis takes the error of approximation (Diamantopoulos & Siguaw, 2000) into account. Both the test of exact fit and the test of close fit make use of the RMSEA statistic. If a model fits perfectly in the population the error due to approximation is set at 0 and the null hypothesis formulated earlier as H_{01a} is consequently tested against H_{a1a} (Diamantopoulos & Siguaw, 2000).

To determine the power of a test of the exact fit hypothesis, a specific value for the parameter needs to be assumed under H_a, because there are as many power estimates, as there are possible values for the parameter under H_a. A value that makes good sense to use in this instance is RMSEA = .05, as RMSEA < .05 is indicative of a good fitting model. If a model achieves close fit in the population the

error due to approximation will be set equal to or less than .05 (Diamantopoulos & Siguaw, 2000). If a model fits only approximately in the population the error due to approximation is set at .05 and the null hypothesis formulated earlier as H_{01b} is consequently tested against H_{a1b} (Diamantopoulos & Siguaw, 2000). To determine the power of a test of the close fit hypothesis a specific value for the parameter again needs to be assumed. A reasonable value to assume is RMSEA = .08, since RMSEA = .08 is the upper limit of reasonable model fit.

The statistical power of the tests for exact and close fit is a function of the effect size (i.e., the assumed value of RMSEA under Ha), the significance level, the sample size (N) and the degrees of freedom (v) in the model (v=½[(p][p+1]3t)=91-38 =57[46]). A SPSS translation of the SAS syntax provided by MacCallum et al. (1996) was used to derive power estimates for the tests of exact and close fit. Given the effect size assumed above, a significance level (α) of .05 and a sample size of 460 were used. The results of the power analyses are shown in Table 4.45.

Table 4.45

Statistical Power of the Tests of Exact and Close Fit for the Adapted Structural Model

H_0	H_a	N	α	df	Power
H_0: RMSEA=0	H_a: RMSEA=.05	460	.05	53	.994812
H_0:RMSEA≤0.05	H_a: RMSEA=.08	460	.05	53	.993987

Table 4.45 indicates that the probability of rejecting the exact fit null hypothesis given that the model fits well, but not perfectly, in the population (i.e., RMSEA = 0.05) is very high (.995). The probability of rejecting the exact fit hypothesis when the model fits well, but not perfectly, is almost a certainty.

[46] t represents the number of parameters to be estimated in the fitted model (in this case 3 γ's, 9 β's, 5 ψ's, 8 λ's and 13 θ_δ's. p represents the number of indicator variables. There are therefore 913x14)/2=91 unique variance and covariance terms in the observed covariance matrix.

The probability of rejecting the null hypothesis of close fit under the true condition of mediocre fit (i.e., RMSEA = .08) in turn is similarly high. The latter finding, taken in conjunction with the fact that the close fit null hypothesis was in fact not rejected, boosts confidence in the merits of the model. It is concluded that the decision not to reject the close fit null hypothesis cannot be attributed to a lack of statistical power.

CHAPTER 5
CONCLUSIONS, RECOMMENDATION AND SUGGESTIONS FOR FUTURE RESEARCH

5.1 INTRODUCTION

Human Resource Practitioners and Industrial Psychologists must honestly and seriously acknowledge that in the past there was wrongdoing and ownership of this must be taken. The effects of the past wrongdoings must be dealt with head on, proactively and effectively. Human Resource practitioners and Industrial Psychologists cannot afford to simply accept the disproportional distribution of job opportunities across racio-ethnic groups and the associated high GINI coefficient. The solution to this problem lies in implementing aggressive affirmative development aimed at developing the job competency potential latent variables required to succeed in the job through educational opportunities. In order to affect a significant decrease in the GINI coefficient previously disadvantaged individuals need to be provided with the still lacking knowledge, skills, abilities and coping strategies to productively participate in the economy. It is, therefore, proposed that the previously disadvantaged individuals with the potential to benefit from cognitively challenging affirmative development opportunities should be identified by Human Resource Practitioners and Industrial Psychologists in industry and should subsequently be developed.

This is possible as the level of learning performance of those who participate in affirmative development programmes is not a random event. Rather, an individual's level of learning performance is an expression of the systematic working of a complex nomological network of person-centred and situational/environmental latent variables. However, in order to differentiate between candidates in terms of their training or development prospects and to optimise training conditions, it is imperative to determine why differences in learning performance exist.

Taylor (1989, 1997) theorised as to what contributes to learning potential and developed a learning potential measure, specifically assessing an individual's latent

and reserve potential, reducing the influence of verbal abilities, cultural meanings and educational qualifications in the form of the APIL test battery (Taylor, 1994). De Goede (2007), based on the work of Taylor (1989, 1994, 1997), then developed a learning potential structural model which explicates the cognitive latent variables collectively constituting learning potential. Following on the work of De Goede (2007) based on Taylor ((1989, 1994, 1997) this study has come up with an expanded learning potential structural model, using De Goede's (2007) learning potential structural model as a foundation. The current study added non-cognitive factors to the De Goede (2007) learning potential structural model and a subset of this model was subsequently empirically tested.

5.2 RESULTS

5.2.1 Evaluation of the Measurement Model

The overall goodness-of-fit of the measurement model was tested through structural equation modelling (SEM). Various indices were interpreted to assess the goodness-of-fit of the measurement model and it was found that the measurement model fits the data well, but not perfectly. The claim that the specific indicator variables used to reflect the specific latent variables comprising the learning potential structural model does, however, seem reasonable.

All the item parcels loaded statistically significantly on the latent variables they were designed to reflect. Furthermore, the values of the squared multiple correlations for the indicators were generally quite high and the measurement error variances generally quite low, thereby legitimising the use of the proposed operationalization of the latent variables to empirically test the learning potential structural model.

5.2.2 Evaluation of Structural Model

Inspection of the beta matrix indicated that the hypothesis that *Time Cognitively Engaged* positively influences *Academic Self-efficacy* was not supported. Furthermore, it was also indicated that the fit of the model would be improved through adding a path from *Learning Performance* to *Learning Motivation*. After adding and removing these paths the analysis was re-run. Good model fit was obtained. Inspection of the output indicated that there were no further paths that should be added or removed that could improve the fit of the structural model. However, the stem-and-leaf plot indicated that the distribution of the standardised residuals appeared to be slightly positively skewed. The estimated model parameters therefore, on average, tended to underestimate the observed covariance terms, suggesting that the model still failed to account for one or more influential paths. Furthermore, less than perfect model fit was indicated by the fact that the standardised residuals for all pairs of observed variables tended to deviate slightly from the 45-degree reference line in the Q plot. Nevertheless, all the null hypothesises were supported and all the signs were in-line with what was hypothesised, except for the path between *Academic Self-efficacy* and *Academic Self-leadership*. The null hypothesis, that *Academic Self-efficacy* (η_1) has a statistically significant effect on *Academic Self-leadership* (η_5), $H_{011}:\beta_{41} = 0$ could be rejected. However the obtained sign was not in the hypothesised direction. It was hypothesised that an increase in *Academic Self-efficacy*, the belief in one's academic ability, would lead to an increase in one's *Academic Self-leadership,* however, the results indicated that this relationship was negative. Subsequent theorising did, however, indicate that the negative structural relationship between these two latent variables to some degree does make substantive theoretical sense. As mentioned, for example, it could be argued that if an individual believes that s/he is capable of succeeding in an academic or learning task, that individual may not see the need to implement academic self-leadership strategies as the individual may feel that s/he is capable of performing successfully without the implementation of these strategies. Cross-validation research will be vital in resolving this debate.

Conscientiousness was the only independent variable and was shown to influence *Time Cognitively Engaged* in the current study. This corroborates research conducted by Nakayama et al. (2007). These authors found that diligent students made an effort to learn and to engage with their study material. According to their research, conscientious students exerted more effort and spent more time on their study material. These students directed their energy towards the learning task in an attempt to form structure and ultimately to transfer existing knowledge to the current task, which allowed them to complete more modules than their less conscientious classmates. *Conscientiousness* was further found to positively influence *Academic Self-leadership* in the current study. Houghton et al. (2004) reported that the *Conscientiousness* factor was significantly positively related with the behaviour focused skills factor (r = .57), the natural reward skills factor (r = .33) and the constructive though processes skills factor (r = .29). In-line with this Stewart et al. (1996) directly examined the relationship between self-leadership and *Conscientiousness* in their field study involving employees at a hotel/resort and found a positive relationship between conscientiousness and employee self-directed behaviours. *Conscientiousness* was further found to positively influence *Learning Motivation* in the current study. This finding makes constitutive sense as individuals who are highly conscientious generally set higher standards for themselves, are more likely to be willing to work hard on tasks (Chen et al., 2001) and generally have a stronger desire to learn (Colquitt & Simmering, 1998).

Academic Self-efficacy, the belief in one's academic capability, was shown in the current study to positively influence *Learning Motivation*. In other words, a strong belief in one's academic capabilities increases motivation to learn. This is in line with research conducted by Chapman and Tunmer (2002). These authors showed that students' self-efficacy influences school performance by impacting motivation, which is in-line with Bandura, (1977, 1997), Deci and Ryan, (1985), as well as Wigfield and Eccles (2002), who all believe that self perceptions of competence can affect subsequent motivation in an activity. Additionally, much research shows that self-efficacy influences academic motivation, learning, and achievement (Pajares, 1996). Students' self-efficacy beliefs have been found to play an especially important role in motivating them to learn and Bandura's theory of self-efficacy (Bandura, 1977, 1997)

indicates that self-efficacy determines the level of motivation and academic achievement and this has been demonstrated in many studies (e.g., Narciss, 2004). Furthermore, *Academic Self-efficacy* was also shown to positively influence *Academic Self-leadership*. *Academic Self-leadership* was therefore shown to require a high level of belief in one's academic capabilities which points to the idea that self-efficacy is important for becoming a successful self-leader.

Furthermore, *Learning Motivation* was shown to influence *Time Cognitively Engaged,* as well as *Academic Self-leadership*. With regards to the relationship between *Learning Motivation* and *Time Cognitively Engaged* it was found that the more an individual is motivated to learn, the more time that individual will spend cognitively engaged in associated learning tasks. *Learning Motivation* was therefore found to serve as the force that brings an individual's intention to learn into action. The relationship found between *Learning Motivation* and *Academic Self-leadership* indicated that the more motivated to learn the individual is, the more likely that individual is to lead him or herself through the process of learning. *Learning motivation* was, therefore, shown to serve as a mobiliser and/or driver of *Academic Self-leadership*.

Time Cognitively Engaged, which takes into account the amount of time spent on a learning task as well as the effort exerted by the individual for that period of time, was found to positively influence *Learning Performance*. Initially it was hypothesised that *Time Cognitively Engaged* would also positively influence *Academic Self-efficacy.* However, this path was not supported and it was removed from the model in order to allow for the model to converge. Regarding *Time Cognitively Engaged* and *Learning Performance* the results revealed that the more time a learner spent cognitively engaged with his or her study material the higher the learners' academic results, which makes constitutive sense.

Academic Self-leadership was found to have a positive relationship with *Time Cognitively Engaged*, *Learning Motivation* and *Academic Self-efficacy*. *Academic Self-leadership* therefore indirectly influenced *Learning Performance* through these

three constructs. Academic Self-leadership was found to increase the amount of time one would spend cognitively engaged in academic tasks, which increased *Learning Performance*. *Academic Self-leadership* was also found to enhance *Learning Motivation* which makes theoretical sense as self-leadership theory can be classified as a motivational theory in which motivation is assumed to be triggered by behavioural and cognitive strategies that influence the initiation, direction, intensity and persistence of behaviour (Manz, 1992; Prussia, Anderson & Manz, 1998). In the learning potential structural model *Learning Motivation* then influenced *Time Cognitively Engaged* which then influenced *Learning Performance*. The last relationship hypothesised, with regards to *Academic Self-leadership*, was a path from *Academic Self-leadership* to *Academic Self-efficacy*. This path was however removed as it was not supported and after it was removed the data was found to fit the model well. This path was supported by research (e.g., Manz, 1986; Manz & Neck, 2004; Neck & Manz, 1992; Neck & Houghton, 2006; Williams, 1997; Manz & Neck, 1999), however, with the wisdom of hindsight it seems more reasonable and it makes more substantive theoretical sense that the effect of *Academic Self-leadership* on *Academic-Self-efficacy* is mediated by a number of mediator latent variables (as shown in Figure 4.4).

Learning Performance was also found to have a feedback-effect in the learning potential structural model. A path was hypothesised from *Learning Performance* to *Academic Self-efficacy*. According to Bandura (1977) self-efficacy is developed via several mechanisms, the largest contributors being self-referenced information such as performance accomplishments. Bandura (1997) further found that the relation of past performance to subsequent performance is mediated through self-efficacy, among other constructs. According to Schunk (1987) performance feedback affects subsequent self-efficacy and the entire process takes place within an ongoing, continuous feedback loop which is in-line with the relationship proposed in the learning potential structural model from *Learning Performance* to *Academic Self-efficacy*.

Based on the modification index feedback obtained from the LISREL output another feedback loop (from *Learning Performance* to *Learning Motivation)* was added to the model. This feedback loop made substantive theoretical sense to such an extent that it left the author wondering how it had not been initially hypothesised in the literature study. It was found that if individuals perform well on learning tasks their *Learning Motivation* increases, and if they perform poorly in learning tasks their *Learning Motivation* decreases. After the addition of this path, as well as the removal of the path from *Time Cognitively Engaged* to *Academic Self-efficacy,* the model fitted the data very well. All the included constructs were shown to play a significant role in the learning performance structural model in that it directly or indirectly determined whether a learner would perform well academically or not. Additionally, these constructs were shown to influence one another in a complex manner.

5.3 LIMITATIONS TO THE RESEARCH METHODOLOGY

Although most of the limitations or shortcomings in the research methodology have already been discussed throughout the text, some of the more important limitations will be highlighted again. Firstly, it should be noted again that good model fit in SEM does not imply causality. Even though the structural model being evaluated hypothesised specific causal paths between the latent variables comprising the model, good model fit and significant path coefficients constitute insufficient evidence to conclude that these causal hypotheses have been confirmed. In the final analysis this is not due to limitations in the analysis technique as such but rather due to the *ex post facto* nature of the study that precludes the experimental manipulation of the relevant latent exogenous and endogenous variables (Kerlinger & Lee, 2000).

Secondly, with regards to the data itself, the initial decision was to use learners' first and second term marks, add them all together and divide by the number of subjects that that learner had (taking into account extra credit for learners having more subjects than required and subjects that were higher grade as opposed to standard grade). Unfortunately the measurement model in which *Learning Performance* was

represented by two aggregate term marks failed to converge. It was then decided to only take the learners' English, Afrikaans and Mathematics first and second term marks (as these three subjects were taken by all learners in all four schools). These three specific subjects were, however, not specifically referred to in the Learning Potential Questionnaire (LPQ). Rather the LPQ referred to the learners first term in general. This may have served as a limitation as the best option would have been to represent the *Learning Performance* of each learner using that learner's full range of subject marks from both terms as referred to on the Learning Potential Questionnaire (LPQ).

Thirdly, the proposed learning potential structural model was tested on a non-probability, convenience sample of grade 11 learners from a non-probability sample of government schools resorting under the Western Cape Department of Education. The results obtained in this study should be generalised to other developmental contexts with great circumspection. Replication of this research on other samples and in different developmental contexts is therefore encouraged.

5.4 PRACTICAL IMPLICATIONS

This study represents a promising first step towards building non-cognitive factors into the De Goede (2007) cognitive learning potential structural model. A positive aspect of this research is that four of the five non-cognitive variables included in the model are deemed to be malleable and could be enhanced in order to increase *Learning Performance*.

Learning institutions and organisations conducting in-house training programmes that want to achieve the highest return on investment for the training can use the results generated in this study in two ways.

Firstly, the results of the study can be used to identify and select individuals who possess the requisite learning competency potential to optimally benefit from the

learning opportunity. The model depicted in Figure 4.4 specifically suggests that *Conscientiousness*, *Academic Self-efficacy*, *Academic Self-leadership* and *Learning Motivation* should be considered for inclusion in selection procedures aimed at optimising *Learning Performance.* These predictors should, however, probably be supplemented with the cognitive predictors suggested by the De Goede (2007) learning potential structural model. The De Goede (2007) model provides inadequate empirical justification for the confident inclusion of *Information Processing Capacity* and *Abstract Reasoning Ability* in the selection for development battery. Further research is required in which the latter two learning competency potential latent variables are included in the learning potential structural model that emerged from this study.

Secondly, the current study results can be used when institutions are compiling training courses and want to enhance the malleable learning competency potential latent variables included in the learning potential structural model, so as to increase the effectiveness of their training. A review of various media reports (Freeman, 2005; Ncana, 2010; Stokes, 2009) generally revealed that skills development is hampered by challenges such as a mismatch between learner expectations and the actual learnership programme, high absenteeism and turnover among learners, a high dismissal rate of learners and learners displaying poor attitudes. In 2007 the department of labour's implementation report on skills development stated that almost 80% of learners registered for SETA learnerships did not complete their training (Letsoalo, 2007). Others, for example Alexander (2006), gave examples of skills development programmes where up to 90% of learners did not complete their training. Although there may be many underlying factors contributing towards the dissatisfaction and poor performance of learners, a frequently cited reason is the poor recruitment and selection of learners into skills development programmes (Letsoalo, 2007). It seems as though organisations often hastily recruit learners to fill the requisite slots, without carefully selecting the most appropriate learners for the programme. This may have the consequence that some learners will prematurely drop out of the programme without having obtained any significant skills that can be used to find gainful employment. Similarly, the organisation that offered the

programme is left with a skills gap without sufficiently skilled employees to perform the required jobs. Based on the results of this study the assessor could assess whether the candidates are, for example, *Conscientious*, possess high *Academic Self-efficacy*, *Academic Self-leadership* and *Learning Motivation,* as these competencies were shown, in this study to influence *Learning Performance*.

A second application of this research relates to the utilisation thereof when training courses are compiled. For example, training programmes/courses could be enriched by including the identified malleable non-cognitive constructs in this study into training material in order to increase the effectiveness of the training. In this application the malleable aspects of the learning competency potential latent variables are highlighted. It is vital that in order to enhance these malleable constructs that the trainers take responsibility as implementation rests squarely on their shoulders. *Academic Self-efficacy*, as mentioned in previous sections, is developed through four avenues; enactive mastery, vicarious experience, verbal persuasion and physiological arousal. Trainers should take note of these as mastery experience, for example, can be made use of to develop the trainee's *Academic Self-efficacy* throughout the training and opportunities to master small sections of the training material can be built into the design of the training programme.

Learning Motivation can also be purposefully enhanced. With regards to *Learning Motivation,* Vroom's (1964) expectancy theory should be taken into account. When institutions or trainers are looking to find ways to motivate the trainees to learn, specific questions should be asked. Questions, such, as would the trainees find this training of value to them? What positive outcomes could this training lead to for the trainees, as well as, what are the expectations of the trainees of achieving success? All these elements should be thoroughly examined in order to make sure that the trainees are motivated to learn. It is vital that the subjective probability (i.e., expectancy) of achieving success should be high. It is also vital that institutions create conditions that demonstrate a clear link for trainees between *Learning Performance* and highly valenced rewards (i.e., *Learning Performance* should be instrumental in achieving highly valenced rewards; Vroom (1964)). For example,

good academic results obtained in training programmes should be clearly linked to outcomes that have valence for trainees, should be instrumental in trainees obtaining desired outcomes (for example promotions, increased responsibility/autonomy). If trainees have high expectancy that effort will translate into learning success, and if *Learning Performance* has valence for trainees and is instrumental in opening up valued doors for trainees, they should be more motivated to learn. To this end it has been reported (Freeman, 2005; Ncana, 2010; Stokes, 2009) that learners generally report dissatisfaction regarding the wage that they receive when engaging in learnership programmes, regardless of the fact that it is a training opportunity and that they are actually being remunerated to learn. This further indicates that it is vital that organisations supplying training must help trainees to make a clear link between their learning performance in the training programme and the outcomes that have valence to them, that are instrumental in them achieving their goals and that meet their expectations.

With regards to *Time Cognitively Engaged*, trainers should be aware of the trainee's schedules and how motivated they are to learn. Taking these factors in to account, among others, the trainers should make a decision as to how much work will have to be studied in the trainees own time and how much instruction time will be allocated. Instructional time is the proportion of allocated time that is actually spent on instructional activities. Instruction time provides an opportunity for trainees to be engaged in learning. If trainees are not spending *Time Cognitively Engaged* outside the classroom, instruction time becomes increasingly important for transfer of knowledge to occur. Furthermore *Time Cognitively Engaged* can also be enhanced through enhancing *Academic Self-efficacy*, *Learning Motivation, And Academic Self-leadership*.

Conscientiousness, a relatively stable personality construct, was also found to be an antecedent of *Learning Performance* therefore indicating the importance of selection of trainees into training programmes.

With regards to *Academic Self-leadership*, empowering employees is a key foundation of self-managed work teams, participative management and other attempts to improve business organisations. As a result of these practices, recognition is growing that managers can rely on employee self-leadership rather than on external leadership as it has been traditionally applied. Self-leadership is considered pivotal to employees' enthusiasm for, commitment toward and performance in organisations. Organisations therefore may do well in training employees in general self-leadership strategies of which the principals/strategies could be applied in the workplace, as well as to learning.

Moreover, the results indicated that *Time Cognitively Engaged* and *Learning Motivation* played the largest role in explaining variance in *Learning Performance* which provides positive results as these two variables are malleable and therefore can be influenced. This, however, then leads to the question as to how organisations or learning institutions can influence these variables in order to bring about better learning performance. The results indicated that *Learning Performance* feeds back into *Learning Motivation, Academic Self-efficacy* and *Time Cognitively Engaged*, therefore, in order to increase the time learners spend cognitively engaged, as well as their *Learning Motivation,* learners should consistently be provided with feedback on their *Learning Performance* throughout their leaning course. Through the provision of clear, honest and timely feedback, learning performance should inevitably be enhanced.

5.5 SUGGESTIONS FOR FUTURE RESEARCH

The nomological network of variables that explain learning potential is vast and consists of a multitude of richly interwoven variables. The literature review revealed numerous possibilities in-terms of latent variables that could be added to the structural model and that may play a role in explaining why some individuals have a higher potential to learn than others. The author spent a long time lost in the literature with the aim of unravelling the underlying structure that may explain variance in *Learning Performance*. After spending a long while immersed in the

literature, along with constantly reminding oneself as to the aim of the study, a structure emerged in which a few relevant, prominent and what appeared to be absolutely vital variables stood out that subsequently formed the learning potential structural model proposed in this study. In this section of the study, the other variables, not included in the proposed learning potential structural model, that were uncovered in the literature review process, will be mentioned. It is firstly the vastness, and secondly the complexity, of nomological networks that makes it virtually impossible for any one researcher to be able to gain a complete and accurate understanding of the nomological network of variables, and the interrelationships between the variables, without an immense and seemingly impossible investment in terms of time and energy. The task of completely unfolding the learning potential nomological network is too enormous for any one researcher to achieve successfully and a multipronged approach is necessary. The area must be viewed from many different angles and by many different stakeholders. The only practically feasible manner, in which a comprehensive learning potential model that closely approximates reality can be developed, is by means of a collaborated effort and a shared investment of resources from various researchers who build upon each other's research results.

Before mentioning additional variables that could be added to the learning potential structural model it should be noted that those wanting to stretch the boundaries of the model proposed in the current study should first consider testing the entire proposed learning potential structural model (Figure 2.1) as the reduced model (Figure 3.1) obtained good fit. In addition to this, as mentioned, there are a number of latent variables that appeared relevant to learning potential structural model but were not included in the model and literature study due to the scope of the study.

With regards to *Academic Self-leadership*, which was included in the learning potential structural model, in future research this construct could be broken up into its three strategies. More specific hypothesises were proposed in the literature study (see section 2.4.1.4) where specific self-leadership strategies were hypothesised to

correlate with the latent variables included in the learning potential structural model. This may make further sense in future research as in the results from the dimensionality analysis in this study, the three hypothesised dimensions did not appear. Breaking self-leadership into it's the three strategies/dimensions may, therefore, provide better results in future research.

With regards to variables that could be included in future research, the following could be considered.

- ***Meta-cognition***

Meta-cognition refers to one's knowledge concerning one's own cognitive processes or anything related to them. More simply, meta-cognition can be described as cognition about cognition, or thinking about thinking (Boström & Lassen, 2006).

There is consistent evidence that an important source of difference between learners with high and low academic performance lies in their use of meta-cognitive strategies. It has been shown that when learners effectively monitor their cognitive feedback about their learning, their subsequent performance seems to improve (Schraw, Potenza & Nebelsick-Gullet, 1993). A review study conducted by Wang, Haertel and Walberg (1990) showed that meta-cognition was a powerful predictor of learning in a classroom setting and Landine and Stewart (1998) found meta-cognition to be related to academic achievement and enhanced learning outcomes in a sample of Grade 12 learners. Furthermore, effective learning strategies have been shown to increase students' self-efficacy, which in turn increases motivation and willingness to engage and persist in challenging tasks (Pajares, 1996) which sheds some light on where this construct may fit into the proposed learning potential structural model.

With regards to practical applications, it has been shown that with practice, students can increase their meta-cognitive skills. Opportunities to learn meta-cognitive skills could therefore be provided in training programmes. Educators should balance opportunities to acquire knowledge with those that develop meta-cognitive skills. Meta-cognition comprises two components or dimensions, namely *Knowledge of Cognition* and *Regulation of Cognition. Knowledge of Cognition* refers to what learners understand about their own thinking processes. *Regulation of Cognition* refers to a set of behaviours that assist learners to control their learning (Schraw, 1998). *Knowledge of Cognition* could form an additional learning competency potential latent variable in an expanded De Goede-Burger learning potential structural model, whereas *Regulation of Cognition* could then form a fifth learning competency.

- **Self-deception**

Another construct that may shed light onto the complexity of learning potential, and specifically how *Conscientiousness* and *Academic Self-efficacy* interact in a learning potential structural model, is *Self-deception*. While *Academic Self-efficacy* was included in the proposed learning potential structural model and was shown to play a role in *Learning Performance,* it appears to have a dark side. *Self-deception* refers to a dispositional tendency to have an unrealistically positive self-image. The training literature suggests that *Conscientiousness* is positively related to both *Academic Self-efficacy* (Chen et al., 2001) and *Self-deception* (Barrick & Mount, 1996). Furthermore, both *Academic self-efficacy* and *Self-deception* have been identified as possible mediators of the conscientiousness-training effectiveness relationship (Martocchio & Judge, 1997). However, *Academic self-efficacy* and *Self-deception* are expected to have opposite effects on training effectiveness. *Academic Self-efficacy* is hypothesised to be positively related to learning outcomes, whereas *Self-deception* would be negatively related to learning outcomes. Furthermore, the fact that *Academic Self-efficacy* and *Self-deception*, are expected to have different directional effects on learning may help understand the inconsistent findings that

have been observed in some studies investigating the relationship between *Conscientiousness* and *Learning Performance*. Because *Academic self-efficacy* is expected to have a positive relationship with learning, whereas *Self-deception* is expected to have a negative relationship with learning, the zero-order correlation between *Conscientiousness* and *Learning Performance* may occur depending on the relative effects of these two variables in a particular context (Lee & Klein, 2002). Bandura (1977) highlights the value of reasonably accurate self-appraisals but suggests that large miss-judgments, in either the positive or negative direction, can have detrimental consequences. For example, gross overestimates of academic ability may prompt individuals to attempt activities that are well beyond their capabilities, leading to failure and discouragement. On the other hand, large underestimates of personal efficacy may yield avoidance of potentially rewarding learning pursuits, thereby limiting skill development.

With regards to practical implications, attempts should be made to minimize the negative or neutralizing effect that self-deception can have on learning. Although building mechanisms into training programs to enhance self-efficacy is often considered to be desirable, such efforts could backfire if they perpetuate self-deception. Further research on these interactional possibilities should therefore be conducted in order for more informed self-efficacy interventions to be developed.

- **Time**

Time may play a role as an additional variable in the conscientious, self-efficacy performance relationship. Individual differences in *Conscientiousness* may have its weakest effects on early knowledge acquisition as the learning experience is novel and because most learners are motivated to engage in behaviour needed to perform well. Thus, individual differences in initial effort levels due to *Conscientiousness* may not be large enough to induce performance differences. Over time, however, *Conscientiousness* should become increasingly important as trainees make the choice to persist and to continue their high level of *Time Cognitively Engaged*. The

choice to *continue* to spend *Time Cognitively Engaged* to learn and to persist may eventually distinguish learning performance between learners higher in *Conscientiousness* from the performance of learners lower in *Conscientiousness*. Thus, over time, *Conscientiousness* could be expected to exhibit stronger relations with learning performance because learners with higher levels of *Conscientiousness* are likely to persist or maintain the time they spend cognitively engaged as opposed to individuals who possess lower levels of *Conscientiousness*. Moreover, task novelty may have a positive impact on *Learning Motivation* but those effects may be short-lived under the assumption that the novelty of new environments diminishes as *Time* passes. Specifically, performance differences not initially present among individuals with varying levels of *Conscientiousness* may appear later in *Time*. The decision to spend *Time Cognitively Engaged* may be the important mechanism explaining the conscientious-performance relation *initially*, however, as *Time* passes, the choice to persist may explain why *Conscientious* affects learning performance. Though both the initial time spent cognitively engaged and the continued persistence are similar in that they are both decisions about the amount of time to spend cognitively engaged, they may have distinct antecedents and/or effects. In sum, over time, environments may change in ways that make individual differences in motivation-related variables such as *Conscientiousness* more relevant in learning performance prediction (Perlow & Kopp, 2004) and this could be taken into account in future research.

- **Belonging**

With regards to another possible construct that could be included in future research aimed at elaborating the De Goede-Burger learning potential structural model, Osterman's (2000) stated that 'students who experience acceptance are more highly motivated and engaged in learning and more committed to school' (p. 359). The perception of *Belonging*, as fostered by the recognition of a supportive environment, has been found to positively impact engagement and achievement within school and community settings (Solomon, Battistich, Watson, Schaps & Lewis, 2000). In-line

with this Maslow (1968) argued that only food and shelter take precedence over the need for love and belonging.

With regards to practical applications, establishing a supportive and inclusive environment, learning institutions can foster and support learner's perceptions of belonging thereby increasing learner engagement and academic achievement (Osterman, 2000). There is a growing body of evidence that suggests instructors who wish to emphasize the development of understanding and comprehension would do well to consider how the learning environment can encourage their learner's perceptions of *Belonging*. Instructor support is clearly an element in every classroom that falls under the direct and immediate control of the classroom instructor and, given its relation with perceptions of belonging, should be utilized to effect the amount of time the learner spends cognitively engaged and ultimately the learner's academic achievement.

- **Goals**

Another area worthy of further review has to do with *Goals*. This construct could not only possibly stand alone in future research, but could also be broken down into more specific dimensions. With regards to more specific dimensions of goals, it has been shown that individuals, who set *Proximal Goals*, in addition to *Distal Goals*, achieve higher learning performance scores than those who only set *Distal Goals*. There are two explanations for this; firstly, *Proximal Goals* can improve performance during times of uncertainty in that they often improve error management (Frese & Zapf, 1994). These errors provide learners with information on the extent to which their picture of reality is congruent with goal attainment; they also facilitate the discovery of the strategies needed to accomplish the task. Secondly, as argued by Bandura (1997), *Proximal Goals* can reinforce *Academic Self-efficacy* because their attainment is an early mark of accomplishment. As individuals experience these 'small wins', they are provided with a growing sense of *Academic Self-efficacy* which ensures them that they can attain their distal goal. Moreover, *Proximal Goals* often

provide learners with the feedback necessary to discover strategies needed to attain their distal goal (Latham & Brown, 2006). In a study conducted by Bandura and Schunk (1981) it was reasoned that *Proximal Goals* provide immediate incentives and guides for performance, whereas *Distal Goals* are too far removed in time to effectively mobilise effort or to direct what one does in the present. If goals are set too far in the future individuals may spend less *Time Cognitively Engaged* which may inevitably decrease their *Learning Performance.*

Furthermore, *Goal-Orientation* could also be included in future research. Chiaburu and Marinova (2005) define *Goal-orientation* as an individual's dispositional or situational goal preferences in achievement situations. *Goal-orientation* has been found to have important implications in the training context (VandeWalle & Cummings, 1997). More specifically, achievement goal theorists posited two types of achievement goals, namely; *performance* and *mastery* or learning. Further research has shown that these two types of goal orientations differentially influence how individuals respond to task difficulty and failure (Dweck, Hong & Chiu, 1993). Theorists have argued that learners who adopt a *Mastery Goal Orientation* focus on increasing competence and understanding. *Mastery Goal-orientation* has often been linked to positive academic behaviours such as effort and persistence while studying, the adoption of self-regulated learning strategies, the use of meaningful cognitive processing strategies and long-term retention (Anderman, Griesinger & Westerfield, 1998). Prior research has also linked *Mastery Goal-orientation* to more complex learning strategies as well as deep processing (Chiaburu & Marinova, 2005). On the other hand, students adopting a *Performance Goal-orientation* tend to focus on the accomplishment of a task rather than the task itself and judge their performance relative to others (Midgley, Kaplan & Middleton, 2001). *Performance Goal-orientation* has been empirically linked to maladaptive academic behaviours (Church, Elliot & Gable, 2001), characterized by a greater propensity to withdraw from tasks, especially in the face of failure, less interest in difficult tasks and the tendency to seek less challenging tasks. Individuals with a *Performance Goal-orientation* are also more likely to put forth less effort on a task. Future research could therefore take learners' *Goal-orientation* into account.

- **Locus of control**

Another construct, *Locus of Control* (LOC) appears to play a role in trainees' trainability. The concept of *LOC* was originally developed by Julian Rotter in the 1950s and has its foundation in social learning theory (Marks, 1998). *LOC* refers to an individual's tendency to attribute control over his or her outcomes either to him or herself, namely an *internal*, or to the environment, namely an *external* (Rotter, 1966). According to Spector (1982), *LOC* is a significant personality characteristic that influences beliefs about the ability to improve skills. Empirical evidence suggests that *LOC* can be a factor in learning and transferring of skills (Noe & Schmitt, 1986). Noe (1986) proposed that *Internals* have more positive attitudes towards training opportunities as they are more likely to believe that the training will result in tangible benefits (Noe & Schmitt, 1986). *Internals* are likely to exert greater effort toward collecting relevant information pertaining to a training situation compared to *Externals*. *Internals* may do so because they believe mastering the program content is under their control (Noe, 1986). In addition, *Internals* are more likely to act upon feedback regarding their skill strengths and weaknesses than *Externals*. Hence *Internals* are more likely to exhibit high levels of motivation to learn in a training program. Further, according to Bulus (2011), *Internals* are more effective in acquiring and using knowledge and thereby learn more effectively than *Externals*. Bulus (2011) also states that *LOC* is an important factor influencing intellectual functioning and learning behaviours of learners and that *Internals* are more adaptable in-terms of learning and development. These findings corroborate the conclusions of Phares (1968) who found that *Internals* tend to seek information more actively, and to utilise it more fully, than *Externals*. From the above it is clear that *LOC* may certainly have a role to play in *Learning Performance* and future research may benefit through its inclusion.

- **Optimism**

Another construct that could be added in future research is *Optimism*. A study conducted by Dolbier, Soderstrom and Steinhardt (2001) found that self-leadership

was positively related to dispositional optimism ($r = .68$, $p < .01$). The rational for this correlation may be that when leading with the self, over time the individual begins to trust the self and gain confidence in its ability to maintain harmony and homeostasis. The individual may then begin to believe that good, rather than bad things will happen, and leading with the self may therefore influence optimism. Further, thought self-leadership (TSL) suggests that beliefs and assumptions, self-talk and mental imagery influence one another to produce an individual's thought patterns. This paradigm posits that constructive thought management through effective application of these cognitive strategies can enhance individual cognitive processes, behaviour and affective states (Godwin et al., 1999). *Optimism* may therefore have an interesting role to play in future research related to learning potential.

- **Interest**

To many individuals, including instructors, a learner is motivated when they express interest in a learning task, feel excited about it, or think that it is important and worthwhile. Numerous studies have reported a profound effect between individual interests and learning. Renninger (as cited in Hidi, 1990) investigated the individual interests of young children and found that individual interests served as powerful determinants of their attention, recognition and recall. Singh, Granville and Dika (2002) conducted a study on 8th grade learners and found that *Interest* in a subject is positively related to motivation and learning. Fransson (1977) also showed that *Interest* strongly affects college student's comprehension and recall. In-line with this, motivation research has shown that feelings and beliefs about *Interest* and value lead to more student engagement, as well as learning (Pintrich & Schunk, 1996). Furthermore, *Interest* in a learning task has shown to result in higher learning and comprehension (Pintrich & Schunk, 1996). There may, more specifically, be a relationship between *Interest* and *Academic Self-efficacy* as the study conducted by Bandura and Schunk (1981) revealed that the higher the level of self-efficacy, the greater the *Interest* in associated areas. More specifically, in order to create strong *Interest* in activities that were previously disvalued or even disliked, mastery

experiences will need to occur over a long period of time (Bandura & Schunk, 1981). *Interest* could therefore be included in future research in this field.

- **Prior knowledge**

Lastly, with regards to additional constructs that could be included in future research in this area; *Prior Knowledge* may have a significant role to play. Various studies have demonstrated positive relationships between *Prior Knowledge* and learning. In an extensive review, Dochy, Segers and Buehl (1999) discuss the universal effect of prior knowledge on learning outcomes. From their study of 183 published books, articles, papers and research reports, they conclude that prior knowledge is strongly associated with learning outcomes. Beier and Ackerman (2005) further found prior knowledge to be important during new knowledge acquisition and Ziori and Dienes (2008) found prior knowledge to be an important contributor in the learning of new concepts. Moreover, Shapiro (2004) emphasises the importance of including prior knowledge as a measure in studies of learning, specially learning outcomes, because of its dominant influence on learning. Shapiro (2004) further argues that failure to assess and analyse the role of prior knowledge may distort the conclusions about the factors that influence learning outcomes. *Transfer of Knowledge* as a learning competency is in effect *Abstract Thinking Capacity* in action. *Transfer of Knowedge* occurs when fluid intelligence combines and transforms existing crystallized abilities into a solution to a novel problem. The distance over which fluid intelligence must 'leap' in order to turn *Prior Knowledge* into solutions increases as the level of *Prior Knowledge* decreases. *Abstract Thinking Capacity* cannot operate in a vacuum. This line of reasoning would suggest a *Prior Knowledge* x *Abstract Thinking Capacity* interaction effect on *Learning Performance*. *Prior Knowledge* should therefore be included in future research aimed at expanding the De Goede-Burger learning potential structural model.

It is further recommended that future researchers should not only study the literature but also introspectively study themselves. In answering the question as to what explains variance in *Learning Performance* as well as what makes for a good learner, researchers should look within themselves. While working on this study the author introspectively observed her own learning situation. As the learning potential structural model slowly started to gain structure, and the author learned more about the area of research, so the author further questioned as to what allowed for this learning to take place. The author not only looked to the literature for answers but also looked at what had happened and what was happening to herself. The author questioned the extent to which she possessed constructs included in the model and if so, how these constructs played out in her learning. Through working on this study and learning the author, therefore, underwent a vast amount of introspection as to what made it possible for her to learn as well as complete this study. The insights obtained via the literature study were in addition applied to the authors own learning experiences to see whether they worked in practice. Further through self-observations, self-questioning and the questioning of others at the end, when the model emerged, it was felt that not only was the model representative of what may occur in learners but what happened in the author, herself.

5.6 CONCLUSION

As a direct result of having segregated amenities and public services and providing Black individuals with services inferior to those of White individuals in the past, South Africa is currently challenged by serious and debilitating issues such as a skills shortages, high unemployment and poverty rates, as well as inequality in terms of income distribution and racial representation in the workforce. The severity of unemployment and the poverty situation in South Africa is further exemplified by the high rate of dependence on social assistance grants. In 2011 nearly 31% of South Africans (15 million people) received social assistance grants (Ndlangisa, 2011). Social assistance grants form part of the government's plan to eradicate poverty. The idea is to provide financial relief to the poorest South Africans who are unable to provide for themselves and their families with a decent standard of living. Consequently, only approximately 25% of South Africans (12.25 million people) pay

personal income tax. A great imbalance exists between the number of personal income tax payers (25%) and the number of recipients of social assistance grants (31%). This brings into question the feasibility of such a massive expenditure on social assistance grants. It is debatable whether this approach is sustainable and will allow for economic growth. Further bringing into question the feasibility of such a high dependence on grants is the fact that 15% of the 2009 national budget (or R69 449 million) was spent on social welfare. This is the 2nd largest budget expenditure after education. These negative manifestations of a tragic regime not only affecting the previously disadvantaged group members but also indirectly affects all South Africans, as well as organisations.

The current situation, however, has the potential for idyllic symbiosis. The implementation of affirmative action skill development opportunities provides a direct means in order to alleviate the skills shortages as well as the high unemployment and poverty rates through equipping these previously disadvantaged individuals with the skills, knowledge and abilities that are sought-after in the marketplace. Progress in the battle against poverty and its manifestations can only be achieved by means of providing education and skills development so as to achieve the self-reliance that stems from employment opportunities and decent wages. In his 2011 state of the nation address, President Jacob Zuma, stated that government was building a developmental state and not a welfare state. The President stated that social grants should only be a short term tool enabling beneficiaries of these grants to become self-supporting in the long run (Ndlangisa, 2011).

Furthermore, the private sector is being placed under increased pressure to comply with the employment equity legislation. It is frequently cited that non-compliance to the employment equity requirements is due to the fact that there is a shortage of suitable qualified Black individuals with the skills, knowledge and abilities to conduct the middle-to higher end jobs. Organisations who are desperate to appease the Commission may be tempted to window-dress and give senior titles to Blacks who do not possess the necessary skills, knowledge and abilities to do the job (Luth,

2003). However, window dressing simply does not make good business sense. Affirmative Action, as it is traditionally interpreted in terms of quotas and preferential hiring is a cheap, shallow, insincere cop-out solution that denies the severity of the problem (De Goede & Theron, 2010). Rather, action should be taken in the form of implementing affirmative action skills development opportunities in order to equip the previously disadvantaged individuals with the skills, knowledge and abilities they require to allow them to competently fill those positions. Furthermore, affirmative skills development can also contribute on a macro level towards achieving sustainable economic growth. The Global Competitiveness Index (2009-2010) ranked South Africa 45th during a comparison of 133 economies worldwide and indicated that both the primary-and higher education sectors are prominently responsible for South Africa's lack of ability to achieve economic growth and prosperity. The report made it obvious that sustainable GDP growth is seriously hampered by the fact that such a large group within the country's population is unskilled and uneducated. National initiatives such as ASGISA and JIPSA regard economic growth and development as the most powerful tool available to realise the MDG's. An increased focus on affirmative action skills development is, therefore, urgently required so as to equip previously disadvantaged individuals with the skills, knowledge and abilities they require to effectively participate in the workforce, and subsequently support economic growth.

In addition it must be stressed that in order for the implementation of affirmative action skills development opportunities to lead to the desired outcomes, it will require close collaboration between the government and the private sector. It is unrealistic for the private sector to sit back with folded arms waiting for government to address and resolve this enormous task. Arguably, government does not have at their disposal the extent of resources that is required for this task, including human resources, facilities, equipment, time, and expertise. Rather the private sector must contribute the vast resources at their disposal and be directly involved in offering affirmative action skills development opportunities to deserving candidates within their organisations.

In a country with 11 official languages, many social and educational problems and a huge disproportion in socio-economic and educational back-rounds of individuals, this topic is certainly not a simple matter. However, it is hoped that the results of this study will provide another step forward in making a positive difference in South African society.

REFERENCES

Ackerman, P.L. (1988). Determinants of individual differences during skill acquisition: cognitive abilities and information processing. *Journal of Experimental Psychology, 117*(3), 288-318.

Ackerman, P.L., Kanfer, R., & Goff, M. (1995). Cognitive and noncognitive determinants and consequences of complex skill acquisition. *Journal of Experimental Psychology, 1*(4), 270-304.

Alexander, N. (2006). *Affirmative action and the perpetuation of racial identities in post-apartheid South Africa.* Masters Thesis. University of Fort Harare: Zimbabwe.

Allen, M.J., & Yen, W.M. (1979). *Introduction to Measurement Theory*. Monterey, California: Brooks/Cole.

Anderman, E.M., Griesinger, T., & Westerfield, G. (1998). Motivation and cheating during early adolescence. *Journal of Educational Psychology, 60,* 84–93.

Anderson, C.A. (1983). Motivational and performance deficits in interpersonal settings: The effect of attributional style. *Journal of Personality and Social Psychology, 45*(5), 1136-1147.

Babbie, E., & Mouton, L. (2001). *The practice of social research*. Cape Town: Oxford University Press.

Bagge, C., Nickell, A., Stepp, S., Durrett, C., Jackson, K., & Trull, T.J. (2004). Borderline personality disorder features predict negative outcomes 2 years later. *Journal of Abnormal Psychology, 113*, 279–288.

Baldwin, T.T., & Ford, J.K. (1988). Transfer of training: A review and directions for future research. *Personnel Psychology, 41*, 63-105.

Balla, J.R., & Grayson, D. (1998). Is more ever too much? The number of indicators per factor in confirmatory factor analysis. *Multivariate Behavioral Research, 33(2)*, 181-220.

Bandura, A. (1977). Self-efficacy: Toward a unifying theory of behavioral change. *Psychological Review, 84*(2), 191-215.

Bandura, A., & Schunk, D.H. (1981). Cultivating competence, self-efficacy, and intrinsic interest through proximal self-motivation. *Journal of Personality and Psychology, 41*(3), 586-598.

Bandura, A. (1982). Self-efficacy mechanism in human agency. *American Psychologist, 37*, 122-147.

Bandura, A., & Cervone, D. (1986). Differential engagement of self-reactive influences in cognitive motivation. *Organizational Behavior and Human Decision Processes, 38*, 92–113.

Bandura A. (1988). Organisational applications of social cognitive theory. *Australian Journal of Management, 13*, 137-164.

Bandura, A. (1991). Social cognitive theory of self-regulation. *Organizational Behavior and Human Decision Processes, 50*, 248-287.

Bandura, A. (1993). Perceived self-efficacy in cognitive development and functioning. *Educational Psychologist, 28,* 117–148.

Bandura, A. (Ed.). (1995). *Self-efficacy in changing societies.* Cambridge: Cambridge University Press.

Bandura, A. (1997). *Self-efficacy: The exercise of control.* New York: Freeman.

Bandura, A., Barbaranelli, C., Caprara, G.V., & Pastorelli, C. (2001). Self-efficacy beliefs as shapers of children's aspirations and career trajectories. *Child Development, 72*(1), 187–206.

Bandura, A., & Locke, E.A. (2003). Negative self-efficacy and goal effects revisited. *Journal of Applied Psychology, 88*(1), 87–99.

Barrick, M.R., & Mount, M.K. (1991). The big five personality dimensions and job performance: A meta-analysis. *Personnel Psychology, 44,* 1–27.

Barrick, M.R., Mount, M.K., & Judge, T.A. (2001). Personality and performance at the beginning of the new millennium: What do we know and where do we go next? *International Journal of Selection and Assessment*, *9*, 9–30.

Barrick, M.R., & Mount, M.K. (2005). Yes, personality matters: Moving on to more important matters. *Human Performance, 18,* 359-372.

Baumganel H., Reynolds M., & Paihan R. (1984). How personality and organizational-climate variables moderate the effectiveness of management development programmes: A review and some recent research findings. *Management and Labour Studies, 9,* 1-16.

Beier, M.E., & Ackerman, P.L. (2005). Age, ability, and the role of prior knowledge on the acquisition of new domain knowledge: Promising results in a real-world learning environment. *Psychology and Aging, 20*(2), 341-355.

Bell, B.S., & Kozlowski, S.W.J. (2002). Goal orientation and ability: Interactive effects on self-efficacy, performance, and knowledge. *Journal of Applied Psychology, 87*, 497-505.

Betz, N.E. (1994). Self-concept theory in career development and counseling. *Career Development Quarterly, 43*, 32-42.

Bidjerano, T., & Dai, D.Y. (2007). The relationship between the big-five model of personality and self-regulated learning strategies. *Learning and Individual Differences, 17,* 69–81.

Bleby, M. (2010). *Little progress in alleviating poverty in SA.Business Day*. Retrieved January 3, 2010, from http://allafrica.com/stories/201003010325.html

Bloom, B.S. (1974). Time and learning. *American Psychologist, 29,* 682-688.

Boeyens, J. (1989). *Learning potential: An Empirical Investigation.* NIPR Special Report Pers 435. Pretoria: Human Sciences Research Council.

Boss, A.D., & Sims, H.P. (2008). Everyone fails! Using emotion regulation and self-leadership for recovery. *Journal Managerial Psychology, 23*(2), 135-150.

Boström, L., & Lassen, L.M. (2006). Unraveling learning, learning styles, learning strategies, and meta-cognition. *Education & Training, 48*(2), 178-189.

Bouffard-Bouchard, T. (1990). Influence of self-efficacy on performance in a cognitive task. *Journal of Social Psychology, 130,* 353-363.

Brophy, J. (1983). Conceptualizing student motivation. *Educational Psychologist, 18*, 200-215.

Brown, S.D., Lent, R.W., & Larkin, K.C. (1989). Self-efficacy as a moderator of scholastic aptitude-academic performance relationships. *Journal of Vocational* Behavior*, 35*, 64-75.

Buchanan, T., Johnson, J. A., & Goldberg, L.R. (2005). Implementing a web-factor personality inventory for use on the Internet. *European Journal of Psychological Assessment, 21*, 116–128.

Bulus, M. (2011). Goal-orientations, locus of control, and academic achievement in prospective teachers: An individual differences perspective. *Education Sciences: Theory & Practice, 11*(2), 540-546.

Byrne, B.M. (2001). *Structural equation modelling with AMOS: Basic concepts, applications and programming*. New Jersey: Lawrence Erlbaum Associates, Inc., Publishers.

Campion, M.A., Medseker, G.J., & Higgs, A.C. (1993). Relations between work group characteristics and effectiveness: Implications for designing effective work groups. *Personnel Psychology, 46*, 823-850.

Caprara, G.V., Barbaranelli, C., & Pastorelli, C. (1998). *Comparative test of longitudinal predictiveness of perceived self-efficacy and big five factors.* Paper presented at the 9th conference on personality, university of surrey, U.K.

Carini, R.M., Kuh, G.D., & Klein, S.P. (2004, April). *Student engagement and student learning: Testing the linkages.* Paper presented at the annual meeting of the american educational research association. San Diego: Research in higher education.

Carver, C.S. (1975). Physical aggression as a function of objective self-awareness and attitudes toward punishment. *Journal of Experimental Social Psychology, 11*, 510-519.

Cattell, R.B. (1971). *Abilities: their structure, growth, and action.* Boston: Houghton Mifflin.

Centre for the Study of violence and reconciliation (CSVR). (2009). *Why does south africa have such high rates of violent crimes?* CSVR.

Chamorro-Premuzic, T., & Furnham, A. (2003). Personality predicts academic performance: Evidence from two longitudinal university samples. *Journal of Research in Personality, 37*, 319–338.

Chamorro-Premuzic, T., Furnham, A., & Ackerman, P. (2006). The incremental validity of the typical intellectual engagement scale as predictor of different academic performance measures. *Journal of Personality Assessment, 87,* 261-264.

Chen, G., Casper, W.J., & Cortina, J.M. (2001). The roles of self-efficacy and task complexity in the relationships among cognitive ability, conscientiousness, and work related performance: A meta-analytic examination. *Human Performance, 14*(3), 209-230.

Chiaburu, D.S., & Marinova, S.V. (2005). What predicts skill transfer? An exploratory study of goal-orientation, training self-efficacy and organizational supports. *International Journal of Training and Development, 9*(2), 110-123.

Church, M.A., Elliot, A.J., & Gable, S.L. (2001). Perceptions of classroom environment, achievement goals, and achievement outcomes. *Journal of Educational Psychology, 93*, 43-54.

Clark, C.S. (1990). *Social processes in work groups: A model of the effect of involvement, credibility, and goal linkage on training success.* Unpublished doctoral dissertation, department of management, University of Tennessee, Knoxville.

Coetzee, S. (2011, April). *AHI Newsletter*. Retrieved February 17, 2011 from http://www.ahi.co.za/userfiles/news/documents/201104201303283568.pdf

Colquitt, J. A., & Simmering, M. J. (1998). Conscientiousness, goal orientation, and motivation to learn during the learning process: A longitudinal study. *Journal of Applied Psychology, 83,* 654–665.

Colquitt, J.A., LePine, J.A., & Noe, R.A. (2000). Toward an integrative theory of training motivation: A meta-analytic path analysis of 20 years of research. *Journal of Applied Psychology, 85*(5), 678–707.

Commission for Employment Equity. (2008). *8th CEE annual report*. Labour department: Republic of south africa. Retrieved 4 April, 2010, from http://www.info.gov.za/view/DownloadFileAction?id=90058

Commission for Employment Equity (2009). *Commission for employment equity annual report 2008-2009.* Pretoria: Department of labour, chief directorate of communication.

Corno, L., & Mandinach, E.B. (1983). The role of cognitive engagement in classroom learning and motivation. *Educational Psychologist 18*(2), 88–108.

Costa, P.T., Jr., & McCrae, R.R. (1992). *Revised NEO personality inventory (NEO PI-R) and NEO five-factor inventory (NEO FFI) professional manual.* Odessa: Psychological assessment resources.

Cronbach, L.J. (1949). *Essentials of psychological testing.* New York: Halpern.

Cronbach, L.J., & Gleser, G.C. (Eds.). (1965). *Psychological tests and personnel decisions* (2nd ed.). Illinois: University of Illinois Press.

Cummings, T.G., & Worley, C.G. (Eds.). (1997). *Organizational development and change*. (6th ed.). Cincinnati: South-Western College Publishing.

Darabi, A.A., Nelson, D.W., & Paas, F. (2007). Learner involvement in instruction on a complex cognitive task: Application of performance and mental effort. *Journal of Research on Technology in Education, 40*(1), 39–48.

DeBacker, T., & Nelson, R.M. (1999). Variations on an expectancy-value model of motivation in science. *Contemporary Educational Psychology, 24,* 71–94.

Deci, E.L. (1975). *Intrinsic motivation.* New York: Plenum Publishing Corp.

Deci, E.L., & Ryan, R.M., (1985). *Intrinsic motivation and self-determination in human behavior.* New York: Plenum.

De Goede, (2007). *An investigation into the learning structure of the learning potential construct as measured by the APIL test battery.* Unpublished master's thesis, University of Stellenbosch, Stellenbosch.

De Goede, J., & Theron, C.C. (2010). An investigation into the internal structure of the learning potential construct as measured by the APIL-B test battery. *Management Dynamics, 19*(4), 30-55.

De Volder, M.L., & Lens, W. (1982). Academic achievement and future time perspective as a cognitive-motivational concept. *Journal of Personality and Social Psychology, 42*(3), 566-571.

Diamantopoulos, A., & Siguaw, J.A. (2000). *Introducing LISREL*. London: Sage Publications.

Dixon, A., & Schertzer, S. (2005). Bouncing back: How salesperson optimism and self-efficacy influence attributions and behaviours following failure. *Journal of Personal Selling & Sales Management, 25*(4), 361-369.

Dochy, F., Segers, M., & Buehl, M. (1999). The relation between assessment practices and outcomes of studies: The case of research on prior knowledge. *Review of Educational Research, 69*(2), 147-188.

Dolbier, C.L., Soderstrom, M., & Steinhardt, M.A. (2001). The relationship between self-leadership and enhanced psychological, health, and work outcomes. *The Journal of Psychology, 135*(5), 469-485.

Driskell, J.E., Copper, C., & Moran, A. (1994), Does mental practice enhance performance? *Journal of Applied Psychology, 79*, 481-92.

Dunbar-Isaacson, H. (2006). *An investigation into the measurement invariance of the performance index.* Unpublished master's thesis, University of Stellenbosch, Stellenbosch.

Dunnette, M.D., & Hough, L.M. (Eds.). (1991). *Handbook of industrial and organizational psychology.* Palo Alto: Consulting Psychologists Press.

Du Toit, M., & Du Toit, S.H.C. (2001). *Interactive LISREL: user's guide*. Lincolnwood: Scientific Software International.

Dweck, C.S., Hong, Y.Y., & Chiu, C.Y. (1993) Implicit theories and individual differences in the likelihood and meaning of dispositional inference. *Personality and Social Psychology Bulletin, 19*, 644-656.

Eccles, J.S., & Wigfield, A. (1995). In the mind of the actor: The structure of adolescent achievement task values and expectancy related beliefs. *Society for Personality and Social Psychology Bulletin, 21,* 215–225.

Eden D., & Ravid G. (1982). Pygmalion versus self-expectancy: Effects of instructor and self- expectancy on trainee performance. *Organizational Behavior and Human Performance. 30*, 351-364.

Eilam, B., Zeidner, M., & Aharon, I. (2009). Student conscientiousness, self-regulated learning, and science achievement: An explorative field study. *Psychology in the Schools, 46*(5), 420-432.

Ellis, A. (1977). *The basic clinical theory of rational-emotive therapy*. New York: Springer.

Esterhuyse, W. (2008). Monduitspoel: Inploffing. *Die Burger*. Saturday 2 August.

Farsides, T, & Woodfield, R. (2006). Individual and gender differences in 'good' and 'first class' undergraduate degree performance. *British Journal of Psychology, 98,* 467-483.

Ferguson, G.A. (1954). On learning and human ability. *Canadian Journal of Psychology, 8*(2), 95-112.

Feuerstein, R. (1979). *The dynamic assessment of retarded performance*. Baltimore: University Park Press.

Fransson, A. (1977). On qualitative differences in learning: Effects of motivation and test anxiety on process and outcome. *British Journal of Educational Psychology, 47*, 224-257.

Freeman, J. (2005). Mdladlana proposes FET college takeover. Skills Portal. Retrieved May 21, 2010, from http://www.skillsportal.co.za/page/skills-development/468807-Mdladlana-proposes-FET-college-takeover

Gest, S.D., & Gest, J.M. (2005). Reading tutoring for students at academic and behavioral risk: Effects on time-on-task in the classroom. *Education and Treatment of Children, 28*(1), 25-47.

Ghiselli, E.E., Campbell, J.P., & Zedeck, S. (1981). *Measurement theory for the behavioural sciences*. San Francisco: Freeman and Company.

Gibson, J.L., Ivancevich, J.M. (Jr.)., & Donnelly, J.H. (1997). *Organisations: behaviour, structure, processes.* United States of America: Irwin/McGraw-Hill.

Gibson, J.L., Ivancevich, J.M., Donnelly, J.H., & Konopaske, R. (Eds.). (2006). *Organisations: Behaviour, structure, processes (13th ed.).* New York: McGraw-Hill Irwin.

Girasoli, A.J., & Hannafin, R.D. (2008). Using asynchronous AV communication tools to increase academic self-efficacy. *Computers and Education, 51*, 1676-1682.

Gist, M.E. (1987). Self-efficacy: Implications for organisational behaviour and human resource management. *Academy of Management Review, 12*, 472-485.

Gist. M.E., Schwoerer, C., & Rosen, B. (1989). Effects of alternative training methods on self-efficacy and performance in computer software training. *Journal of Applied Psychology, 74*, 884-891.

Gist, M.E., Bavetta, A.G., & Stevens, C.K. (1990). Transfer training method: Its influence on skill generalization, skill repetition, and performance level. *Personnel Psychology, 43,* 501-523.

Gist, M.E., Stevens, C.K., & Bavetta, A.G. (1991). Effects of self-efficacy and post-training intervention on the acquisition and maintenance of complex interpersonal skills. *Personnel Psychology, 44*, 837-861.

Gist, M.E., & Michell, T.R. (1992). Self-efficacy: A theoretical analysis of its determinants and malleability. *Academy of Management Review, 17*, 183-211.

Godwin, J.L., Neck, C.P., & Houghton, J.D. (1999). The impact of thought self-leadership on individual goal performance: A cognitive perspective. *Journal of Management Development, 18*(2), 153-169.

Goff, M., & Ackerman, P.L. (1992). Personality–intelligence relations: Assessing typical intellectual engagement. *Journal of Educational Psychology, 84*, 537–552.

Goldstein, I.L., & Ford, J.K. (2002). *Training in organizations*. Belmont: Wadsworth.

Gore, P.A. (2006). Academic self-efficacy as a predictor of college outcomes: Two incremental validity studies. *Journal of Career Assessment, 14,* 92–115.

Gould, S.J. (2011). *Good reads.* Retrieved June 5, 2011, from http://www.goodreads.com/quotes/show/99345

Gray, E.K., & Watson, D. (2002). General and specific traits of personality and their relation to sleep and academic performance. *Journal of Personality, 70*, 177–206.

Greene, B.A., DeBacker, T.K., Ravindran, B., & Krows, A.J. (1999). Goals, values, and beliefs as predictors of achievement and effort in high school mathematics classes. *Sex Roles, 40,* 421–458

Guion, R.M. (1998). *Assessment, measurement and prediction for personnel decisions.* Mahwah: Lawrence Erlbaum.

Hackett, G., & Betz, N. (1981). A self-efficacy approach to the career development of women. *Journal of Vocational Behaviour, 18*(3), 326-39.

Hair, J.F., Anderson, R.E., & Tantham, R.L. (Eds.). (2006) *Multivariate data analysis* (10th ed.). Prentice Hall: New Jersey.

Hammond, C., & Feinstein, L. (2005). The effects of adult learning on self-efficacy. *London Review of Education, 3*(3), 265–287.

Hannah, S.T., Avolio, B., Luthans, F., & Harms, P.D. (2008). Leadership efficacy: Review and future directions *The Leadership Quarterly, 19*(6), 669-692.

Henning, R., Theron, C.C., & Spangenberg, H. (2004). The internal structure of the unit performance construct as measured by the performance index (PI). *South African Journal of Industrial Psychology, 30*(2), 26-36.

Hicks, W.D., & Klimoski, R.J. (1987). Entry into training programmes and its effects on training outcomes: A field experiment. *Academy of Management Journal, 30*, 542-552.

Hidi, S. (1990). Interest and its contribution as a mental resource for learning. *Review of Educational Research, 60*(4), 549-571.

Higgins, D.M., Peterson, J.B., Pihl, R.O., & Lee, A.G.M. (2007). Prefrontal cognitive ability, intelligence, Big five personality, and the prediction of advanced academic and workplace performance. *Journal of Personality and Social Psychology, 93*, 298–319.

Hoffman, P. (2007). The institute for accountability in southern africa: Affirmative action: Redressing or creating imbalances? (cont.). Retrieved April 22, 2011, from http://www.ifaisa.org/Affirmative_action.html

Hogan. R. (2005). In defense of personality measurement: New wine for old whiners. *Human Performance, 18*(4), 331–341.

Holton, E.F. III. (1996). The flawed four-level evaluation model. *Human Resource Development Quarterly, 7*, 5-21.

Hough, L.M., Oswald, F.L., & Ployhart, R.E. (2001). Determinants, detection and amelioration of adverse impact in personnel selection procedures: Issues evidence and lessons learned. *International Journal of Selection and Assessment, 9*(1), 152-194.

Hough, L.M., & Oswald, F.L. (2005). They're right, well... mostly right: Research evidence and an agenda to rescue personality testing from 1960s insights. *Human Performance, 18*(4), 373–387.

Houghton, J.D. (2000). *The relationship between self-leadership and personality: A comparison of hierarchical factor structures.* Unpublished doctoral dissertation, Virginia Polytechnic Institute and State University, Blacksburg.

Houghton, J.D., & Neck, C.P. (2002). The revised self-leadership questionnaire: Testing a hierarchical factor structure for self-leadership. *Journal of Managerial Psychology, 17*(8), 672-691.

Houghton, J.D., Bonham, T.W., Neck C.P., & Singh, K. (2004). The relationship between self-leadership and personality: A comparison of hierarchical factor structures. *Journal of Managerial psychology, 19*(4), 427-441.

Hulin, C.L., Drasgow, F., & Parsons, C.K. (1983). *Item response theory: Application to psychological measurement*. Illinois: Dow Jones-Irwin, Homewood.

Hunter, J.E., & Hunter, R.F. (1984). Validity and utility of alternative predictors of job performance. *Psychological Bulletin, 96*, 72-98.

Hunter, J.E. (1986). Cognitive ability, cognitive aptitudes, job knowledge, and job performance. *Journal of Vocational Behaviour, 29*, 340-362.

Ilies, R., & Judge, T.A. (2002). Understanding the dynamic relationship between personality, mood, and job satisfaction: A field experience sampling study. *Organizational Behavior and Human Decision Processes, 89*, 1119–1139.

International Personality Item Pool. (2001). Retrieved May 28, 2011, from http://ipip.ori.org/newNEOKey.htm#Conscientiousness

Jensen, A.R. (1998). *The g factor: The science of mental ability*. Connecticut: Praeger Publishers.

Jinks, J., & Morgan, V. (1999). Children's perceived academic self-efficacy: An inventory scale. *The Clearing House, 72*(4), 224-237.

Joint Initiative on Priority Skills Acquisition (JIPSA). (2007). *Report on activities in 2007*. JIPSA. Retrieved August 26, 2010, from http://www.info.gov.za/view/DownloadFileAction?id=80103%20

Jöreskog, K.G., & Sörbom, D (1993). *LISREL 8: Structural equation modeling with the SIMPLIS command language*. United States of America: Scientific Software International, Inc.

Jöreskog, K.G., & Sörbom, D. (1996a.) *LISREL 8: User's reference guide*. Chicago: Scientific Software International.

Jöreskog, K.G., & Sörbom, D. (1996b). *PRELIS 2: User's reference guide*. Chicago: Scientific Software International.

Jöreskog, K.G. (1999). *How large can a standard coefficient be?* Retrieved August 11, 2011, from http://www.ssicentral.com/lisrel/techdocs/HowLargeCanaStandardizedCoefficientbe.pdf

Jöreskog, K.G., & Sörbom, D. (1999). *LISREL 8: User's reference guide.* Lincolnwood: Scientific Software International, Inc.

Judge, T.A., Higgins, C., Thoresen, C.J., & Barrick, M.R. (1999). The big 5 personality traits, general mental ability, and career success across the lifespan. *Personnel Psychology, 52*, 621-652.

Kanfer, R., & Ackerman, P.L. (1989). Motivation and cognitive abilities: An integrative/aptitude-treatment interaction approach to skill acquisition. *Journal of Applied Psychology, 74*(4), 657-690.

Kelloway, E.K. (1998). *Using LISREL for structural equation modeling*. Thousand Oaks: SAGE Publications.

Kerlinger, F.N., & Pedhazur, E.J. (1973). *Multiple regression in behavioral research*. New York: Holt, Rinehart, and Winston.

Kerlinger, F.N., & Lee, H.B. (Eds.). (2000). *Foundations of behavioral research* (4th ed.). New York: Harcourt College Publishers.

Khumalo, L. (2003). *The challenge of growth and poverty: The south african economy since democracy.* Retrieved February 19, 2011, from http://www.tips.org.za/node/352

Kinder, A., & Robertson, I.T. (1994). Do you have the personality to be a leader? The importance of personality dimensions for successful managers and leaders. *Leadership & Organisational Development Journal, 15*(1), 3-12.

Koestner, R., Bernieri, F., & Zuckerman, M. (1992). Self-regulation and consistency between attitudes, traits, and behaviours. *Personality and Social Psychology Bulletin, 18*(1), 52-59.

Konradt, U., & Andressen, P. (2009). Self-leadership in organisational teams: A multilevel analysis of moderators and mediators. *European Journal of Work and Organisational Psychology, 18*(3), 322-346.

Kozlowski, S.W.J., Gully, S.M., Brown, K.G., Salas, E., Smith, E.M., & Nason, E.R. (2001). Effects of training goals and goal orientation traits on multi-dimensional training outcomes and performance adaptability. *Organizational Behavior and Human Decision Processes, 85*(1), 1–31.

Krueger, N., & Dickson, P. (1994). How believing in ourselves increases risk taking. *Decision Sciences, 25*(3), 385–400.

Lackaye, T., Margalit, M., Ziv, O., & Ziman, T. (2006). Comparisons of self-efficacy, mood, effort, and hope between students with learning disabilities and their non-LD-matched peers. *Learning Disabilities Research and Practice, 21,* 111-121.

Landine, J., & Stewart, J. (1998). Relationship between metacognition, motivation, locus of control, self-efficacy, and academic achievement. *Canadian Journal of Counselling, 32*(3), 200-212.

Landman, J.P., Bhorat, H., van der Berg, S., & van Aard, C. (2003). *Breaking the grip of poverty and inequality in south africa 2004-2014.* Pretoria: Unisa.

Lane, J., Lane, A., & Kyprinou, A. (2004). Self-efficacy, self-esteem and their impact on academic performance. *Social Behaviour and Personality, 32*(3), 247-256.

Latham, G.P., & Brown, T.C. (2006). The effect of outcome vs. learning goals on self-efficacy, satisfaction and performance in a MBA program. *Applied Psychology: An International Review, 55*(4), 606–623.

Lawler, E.E. (1973). *Motivation in work organizations*. Monterey: Brooks/Cole.

Lee, S., & Klein, H.J. (2002). Relationships between conscientiousness, self-efficacy, self-deception, and learning over time. *Journal of Applied Psychology, 87*(6), 1175–1182.

Lent, R.W., Lopez, F.G., & Bieschke, K.J. (1993). Predicting mathematics-related choice and success behaviors: Test of an expanded social cognitive model. *Journal of Vocational Behavior, 42*, 223–236.

Letsoalo, M. (2007). Seta results a big blow for government. *Mail and Guardian*. Retrieved May 18, 2011, from http://mg.co.za/article/2007-10-31-seta-results-a-big-blow-for-government on

Li, A.K.F. (1988). Self-perception and motivational orientation in gifted children. *Roeper Review, 10*(3), 175-180.

Linnenbrink, E.A., Pintrich, P.R., & Arbor, A. (2003). The role of self-efficacy beliefs in student engagement and learning in the classroom. *Reading & Writing Quarterly, 19*, 119-137.

Locke, E.A., & Latham, G.P. (1990). *A theory of goal setting and task performance.* Englewood Cliffs: Prentice Hall.

Locke, E.A., & Latham, G.P. (2002), Building a practically useful theory of goal setting and task motivation: A 35-year odyssey. *American Psychologist, 57*, 705-17.

Lodewyk, K.R., & Winne, P.H. (2005). Relations among the structure of learning tasks, achievement, and changes in self-efficacy in secondary students. *Journal of Educational Psychology, 97*(1), 3–12.

Luth, D. (2003). *The conceptualization and progress of affirmative action in post-apartheid south africa.* Cape Town: Southern African Catholic Bishops' Conference.

MacCallum, R.C., Browne, M.W., & Sugawara, H.M. (1996). Power analysis and determination of sample size for covariance structure modeling. *Psychological Methods*, *1*, 130-149.

Manz, C.C. (1983). *The art of self-leadership: Strategies for personal effectiveness in your life and work.* Prentice-Hall: Englewood Cliffs.

Manz, C.C. (1986). Self-leadership: Toward an expanded theory of self-influence processes in organisations. *Academy of Management Review, 11*(3), 585-600.

Manz, C.C., Adsit, D., Campbell, S., & Mathison-Hance, M. (1988), Managerial thought patterns and performance: A study of perceptual patterns of performance hindrances for higher and lower performing managers. *Human Relations, 41*, 447-65.

Manz, C.C., & Sims, H. P. (1989). *Superleadership: Leading others to lead themselves.* New York: Prentice Hall.

Manz, C.C., & Sims, H.P. Jr. (1990). *Superleadership.* New York: Berkeley Books.

Manz, C.C., & Neck, C.P. (1991). Inner leadership: Creating productive thought patterns, *The Academy of Management Executive, 5*, 87-95.

Manz, C.C. (1992). *Mastering self-seadership: Empowering yourself for personal excellence.* Englewood Cliffs: Prentice-Hall.

Manz, C., & Sims, H. (1996). *Creating a company of heroes*. Wiley, New York.

Manz, C.C., & Neck, C.P. (Eds.). (1999), *Mastering self-leadership: Empowering yourself for personal excellence.* (2nd ed.). Upper Saddle River: Prentice-Hall.

Manz, C.C., & Sims, H.P. Jr. (2001), *New superleadership: Leading others to lead themselves*. San Francisco: Berrett-Koehler.

Manz, C.C., & Neck, C.P. (Eds.). (2004). *Mastering self-leadership: Empowering yourself for personal excellence.* (3rd ed.). Upper Saddle River: Pearson Prentice Hall.

Marks, L.I. (1998). Deconstructing locus of control: Implications for practitioners. *Journal of Counseling & Development, 76*, 251- 260.

Marsh, H.W., & Yeung, A.S. (1997). Causal effects of academic self-concept on academic achievement: Structural equation models of longitudinal data. *Journal of Educational Psychology, 89*, 41-54.

Marsh, H.W., Hau, K., Balla, J.R., & Grayson, D. (1998). Is more ever too much? The number of indicators per factor in confirmatory factor analysis. *Multivariate Behavioural Research, 33*(2), 181-220.

Martocchio, J.J., & Webster, J. (1992). Effects of feedback and cognitive playfulness on performance in microcomputer training. *Personnel Psychology, 45,* 553-578.

Martocchio, J.J., & Judge, T.A. (1997). Relationship between conscientiousness and learning in employee training: Mediating influences of self-deception and self-efficacy. *Journal of Applied Psychology, 82,* 764–773.

Maslow, A.H. (1968). *Toward a psychology of being*. (2nd ed.). New York: Van Nostrand Reinhold.

Mathieu, J.E., & Zajac, D. (1990). A review and meat-analysis of the antecedents, correlates, and consequences of organisational commitment. *Psychological Bulletin, 108*, 171-194.

Mathieu, J.E., & Tannenbaum, S.I., & Salas, E. (1992). The influences of individual and situational characteristics on measures of training effectiveness. *Academy of Management Journal, 35*, 828-847.

Maurer, T., & Palmer, J.K. (1999). Management development intentions following feedback: Role of perceived outcomes, social pressures, and control. *Journal of Management Development, 18*, 733-751.

Maxwell, S.E., & Arvey, R.D. (1993). The search for predictors with high validity and low adverse impact: Compatible or incompatible goals? *Journal of Applied Psychology, 78*, 433-437.

McCrae, R.R., & Costa, P.T. Jr. (1990). *Personality in adulthood.* New York: Guilford.

McHenry, J.J., Hough, L.M., Toquam, J.L., Hanson, M.A., & Ashworth, S. (1990). Project A validity results: The relationship between predictor and criterion domains. *Personnel Psychology, 43*, 335–354

Mels, G. (2000). *Statistical methods for correlational matricies*. Unpublished PhD Thesis: University of Port Elizabeth, Port Elizabeth.

Mels, G. (2003). *A workshop on structural equation modeling with LISREL 8.54 for windows*. Chicago: Scientific Software International.

Mervielde, L.I., Deary, I., DeFruyt, F., & Ostendorf, F. (Eds.), (1999). *Personality psychology in europe.* The Netherlands: Tilberg University Press.

Metallidou, P., & Vlachou, A. (2007). Motivational beliefs, cognitive engagement, and achievement in language and mathematics in elementary school children. *International Journal of Psychology, 42*(1), 2–15.

Midgley, C., Kaplan, A., Middleton, M. (2001). Performance-approach goals: Good for what, for whom, under what circumstances, and at what cost? *Journal of Educational Psychology, 93*, 77-86.

Miller, R.B., & Brickman, S.J. (2004). A model of future-oriented motivation and self-regulation. *Educational Psychology Review, 16,* 9–33.

Moon, H. (2001). The two faces of conscientiousness: Duty and achievement striving in escalation of commitment dilemmas. *Journal of Applied Psychology, 86*(3), 533-540.

Morin, L., & Latham, G.P. (2000). The effect of mental practice and goal setting as a transfer of training intervention on supervisors' self-efficacy and communication skills: An exploratory study. *Applied Psychology: An International Review, 49*(3), 566-578.

Mount, M.K., & Barrick, M.R. (1995). The big five personality dimensions: Implications for research and practice in human resource management. *Research in Personnel and Human Resources Management, 13,* 153–200.

Mount, M.K., & Barrick, M.R. (1998). Five reasons why the big five article has been frequently cited. *Personnel Psychology, 51*, 849-857.

Muller, G.F. (2006). Dimension of self-leadership: A german replication and extension. *Psychological Reports, 99*, 357-362.

Multon, K.D., Brown, S.D., & Lent, R.W. (1991). Relation of self-efficacy beliefs to academic outcomes: A meta-analytic investigation. *Journal of Counseling Psychology, 38*(1), 30-38.

Mummenthey, C. (2008). *Implementing efficient and effective learnerships in the construction industry.* Unpublished master's thesis: University of Stellenbosch, Stellenbosch.

Nakayama, M., Yamamoto, H., & Santiago, R. (2007). The impact of learner characteristics on learning performance in hybrid courses among japanese students. *The Electronic Journal of e-Learning, 5*(3), 195-206.

Narciss, S. (2004). The impact of informative tutoring feedback and self-efficacy on motivation and achievement in concept learning. *Experimental Psychology, 51*(3), 214-228.

Ncana, N. (2010). Blade orders skills growth. *Times Live*. Retrieved May 8, 2010, from http://www.timeslive.co.za/sundaytimes/article264346.ece

Ndlangisa, S. (2011). State of the nation address: 5 things worth knowing. *City Press*. Retrieved March 2, 2010, from http://www.citypress.co.za/SouthAfrica/News/State-of-the-nation-address-5-things-worth-knowing-

Neck, C.P., & Manz, C.C. (1992). Thought self-leadership: The impact of self-talk and mental imagery on performance. *Journal of Organizational Behavior, 12*, 681-699.

Neck, C.P., & Manz, C.C. (1996). Thought self-leadership: The impact of mental strategies training on employee behavior, cognition, and emotion. *Journal of Organizational Behavior, 17,* 445-467.

Neck, P.C., Neck, H.M., Manz, C.C., & Godwin, J. (1999). I think I can. I think I can: A self-leadership perspective toward enhancing entrepreneur thought patterns, self-efficacy, and performance. *Journal of Managerial Psychology, 14*(6), 477-501.

Neck, C.P., & Houghton, J.D. (2006). Two decades of self-leadership theory and research: Past developments, present trends, and future possibilities. *Journal of Managerial Psychology, 21*(4), 270-295.

Nel, P.S., Gerber, P.D., van Dyk, P.S., Haasbroek, G.D., Schultz, H.B., Sono, T., & Werner, A. (Eds.). (2001). *Human Resources Management. (5th ed.).* Cape Town, South Africa: Oxford University Press Southern Africa.

Nijhuis, J., Segers, M., & Gijselaers, W. (2007). The interplay of perceptions of the learning environment, personality and learning strategies: A study amongst international business studies students. *Studies in Higher Education*, *32*(1), 59-77.

Noe, R.A. (1986). Trainees' attributes and attitudes: Neglected influences on training effectiveness. *Academy of Management Review, 11*, 736-749.

Noe, R.A., & Schmitt, N. (1986). The influence of trainee attitudes on training effectiveness: Test of a model. *Personnel Psychology, 39*, 497-523.

Noe, R., & Wilk, S. (1993). Investigation of factors that influence employees' participation in activities development activities. *Journal of Applied Psychology, 78*, 291-302.

Norris, S.E. (2008). An examination of self-leadership. *Emerging Leadership Journeys, 1*(2), 43-61.

Nunes, C. (2003). *The effects of the ability and motivation on the transfer process.* Unpublished master's thesis: University of Stellenbosch, Stellenbosch.

Nunnally, J.C. (Ed.). (1978). *Psychometric Theory.* (2nd ed.). New York: McGraw-Hill.

O'Connor, M., & Paunonen, S. (2007). Big five personality predictors of post-secondary academic performance. *Personality and Individual Differences, 43,* 971-990.

Osterman, K.F. (2000). Students' need for belonging in the school community, *Review of Educational Research, 70*(3), 323-367.

Pajares, F. (1996). Self-efficacy beliefs in academic settings. *Review of Educational Research, 66,* 543–578.

Perlow, R., & Kopp, L.S. (2004). Conscientiousness and ability as predictors of accounting learning. *Human Performance, 17*, 359-373.

Phares, E.J. (1968). Differential utilization of information as a function of internal-external control. *Journal of Personality, 36*, 649-662.

Pintrich, P.R., & Schunk, D.H. (1996). *Motivation in education: Theory, research and applications.* Englewood Cliffs: Prentice Hall Merrill.

Pintrich, P.R., & Schunk, D.H. (2002). *Motivation in education: Theory, research, and applications.* Columbus: Merrill.

Popper, M., & Mayseless, O. (2007). The building blocks of leader development: A psychological conceptual framework. *Leadership & Organization Development Journal, 28*(7), 664-684.

Primary Health Care Sector Policy Support Programme (2009). Retrieved February 17, 2011, from http://ec.europa.eu/europeaid/documents/aap/2010/af_aap_2010_zaf.pdf

Prussia, G.E., Anderson, J.S., & Manz, C.C. (1998). Self leadership and performance outcomes: The mediating influence of self-efficacy. *Journal of Organizational Behavior, 19*, 523-538.

Ralls, R.S., & Klein, K.J. (1991). *Trainee cognitive ability and motivation: Effects on computer training performance.* Paper presented at the 6th Annual Conference of Industrial and Organizational Psychology, St. Louis.

Reber, R.A., & Wallin J.A. (1984). The effects of training, goal setting, and knowledge of results on safe behavior: A component analysis. *Academy of Management Journal, 27,* 544- 560.

Redmond, M.R., Mumford, M.D., & Teach, R. (1993). Putting creativity to work: Effects of leader behaviour on subordinate creativity. *Organizational Behaviour and Human Decision Processes, 55*, 120-151.

Ree, M.J., & Earles, J.A. (1991). Predicting training success: Not much more than g. *Personnel Psychology, 44*, 321-332.

Reed, J.H., & Schallert, D.L. (1993). The nature of involvement in academic discourse tasks. *Journal of Educational Psychology, 85*, 253–266.

Reeve, J., Jang, H., Carrell, D., Jeon, S., & Barch, J. (2004). Enhancing students' engagement by increasing teachers' autonomy support. *Motivation and Emotion, 28*(2), 147–169.

Republic of South Africa. (1998). Employment equity act. *Government Gazette*, No. 19370, 19 October 1998.

Rhoades, L., & Eisenberger, R. (2002). Perceived organisational support: A review of the literature. *Journal of Applied Psychology*, *87*(4), 689-714.

Richardson, J.C., & Newby, T. (2006). The role of students' cognitive engagement in online learning. *The American Journal of Distance Education, 20*(1), 23–37.

Roethlisberger, F., & Dickson, W. (1939). *Management and the worker.* Cambridge: Cambridge University Press.

Rotter, J.B. (1966). Generalized expectancies for internal versus external control of reinforcement. *Psychological Monographs: General and Applied, 80*(1), 1-28.

Ruvolo, A.P., & Markus, H.R. (1992). Possible selves and performance: The power of self relevant imagery. *Social Cognition, 10*, 95-124.

Ryan, E.D., & Simons, J. (1981). Cognitive demand, imagery, and frequency of mental rehearsal as factors influencing acquisition of motor skills. *Journal of Sports Psychology, 3*, 35-45.

Ryman, D.H., & Biersner, R.J. (1975). Attitudes predictive of diving success. *Personnel Psychology, 28,* 181-188.

Sahin, F. (2011). The interaction of self-leadership and psychological climate on job performance. *African Journal of Business Management, 5*(5), 1787-1794.

Salgado, J.F. (1997). The five factor model of personality and job performance in the European community. *Journal of Applied Psychology, 82,* 30–42.

Salgado, J.F. (2003). Predicting job performance using FFM and non-FFM personality measures. *Journal of Occupational and Organisational Psychology*, *76*, 323–346.

Saville & Holdsworth. (2000). *Competency design: Towards an integrated human resource management system.* SHLNewsline, March, 7-8.

Saville & Holdsworth. (2001). *Competencies and performance@work.* SHLNewsline, May, 6.

Schmidt, F.L., & Hunter, J.E. (1998). The validity and utility of selection methods in personnel psychology: Practical and theoretical implications of 85 years of research findings. *Psychological Bulletin, 124,* 262-274.

Schraw, G. (1998). Promoting general metacognitive awareness. *Instructional Science, 26*, 113-125.

Schraw, G., Potenza, M.T., & Nebelsick-Gullet, L. (1993). Constraints on the calibration of performance. *Contemporary Educational Psychology, 18,* 455–463.

Schunk, D.H. (1987). *Self-efficacy and cognitive achievement.* Paper presented at the 95th Annual Convention of the American Psychological Association, New York.

Schunk, D.H. (1989). Self-efficacy and achievement behaviors. *Educational Psychology Review, 1*, 173-208.

Schunk, D.H. (1991). Self-efficacy and academic motivation. *Educational Psychologist, 26,* 207–231.

Sebusi, I.E. (2007). *An economic analysis of the skills shortage problem in south africa.* Unpublished master's thesis: University of Johannesburg, Johannesburg.

Seligman, M.E.P. (1991). *Learned Optimism*. New York: Alfred Knopf.

Shapiro, A.M. (2004). How including prior knowledge as a subject variable may change outcomes of learning research. *American Educational Research Journal, 41*(4), 159-189.

Simons, J., DeWitte, S., & Lens, W. (2000). Wanting to have vs. wanting to be: The effect of perceived instrumentality on goal orientation. *British Journal of Psychology, 91,* 335–352.

Singh, K., Granville, M., & Dika, S. (2002). Mathematics and science achievement: Effects of motivation, interest, and academic engagement. *The Journal of Educational Research, 95*(6), 323-332.

Skinner, E.A., & Belmont, M.J. (1993). Motivation in the classroom: Reciprocal effects of teacher behavior and student engagement across the school year. *Journal of Educational Psychology, 85,* 571-581.

Solomon, D., Battistich, V., Watson, M., Schaps, E., & Lewis, C. (2000). A six-district study of educational change: Direct and mediated effects of the child development project. *Social Psychology of Education, 4*, 3–51.

South africa millennium development goals mid-term country report. (2007). *September.* Retrieved March 5, 2011, from http://planipolis.iiep.unesco.org/upload/South%20Africa/South_Africa_MDG_midterm.pdf

Spector, P. (1982). Behavior in organizations as a function of employee's locus of control. *Psychological Bulletin, 91*, 482-497.

SPSS. (2011). IBM SPSS statistics. Retrieved October 28, 2011, from http://www-01.ibm.com/software/analytics/spss/products/statistics/

Stanek, D.M. (1995). *Modelling perceptions and preference of home-based and center-based telecommunting*. Master's thesis: University of California, California.

STATS SA. (2010). *Labour force survey.* Pretoria: Statistics South Africa. Retrieved June 6, 2010, from http://www.statssa.gov.za/publications/P0211/P0211October2010.pdf

Steinmayr, R., Bipp, T., & Spinath, B. (2011). Goal orientations predict academic performance beyond intelligence and personality. *Learning and Individual Differences, 21*, 196-200.

Sternberg, R.J. (Ed.). (1984). *Mechanisms of cognitive development.* New York: Freeman.

Stewart, G.L., Carson, K.P., & Cardy, R.L. (1996). The joint effects of conscientiousness and self-leadership training on employee self-directed behaviour in a service setting. *Personnel Psychology, 49*, 143-164.

Stokes, G. (2009). Had enough of the employment equity debate? *FAnewsOnline.* Retrieved June 8, 2010, from http://www.fanews.co.za/article.asp?Front_Page_Features;25,Stokes_Stage;1145,Had_enough_of_the _employment_equity_debate;6766

Swanson, H.L., & Kozleski, E.B. (1985). Self-talk and handicapped children's academic needs: Applications of cognitive behaviour modification techniques. *A Journal for Remedial Education and Counselling, 1*, 367-379.

Tabachnick, B.G., & Fidell, L.S. (Eds.). (2001). *Using multivariate statistics.* (4th ed.). Boston: Allyn and Bacon.

Tabachnick, B.G., & Fidell, L.S. (Eds.). (2007). *Using multivariate statistics.* (5th ed.). New York: Pearson Education.

Tannenbaum, S.I., Mathieu, J.E., Salas, E., & Cannon-Bowers, J.A. (1991). Meeting trainees' expectations: The influence of training fulfillment on the development of commitment, self-efficacy, and motivation. *Journal of Applied Psychology, 76*(6), 759-769.

Tannenbaum, S.I., & Yukl, G. (1992). Training and development in work organisations. *Annual Review of Psychology, 43*, 399-441.

Taylor, T.R. (1989). International development in psychological assessment. *Congress on Psychometrics for Psychologists.* Eskom and the Society of Industrial Psychology of South Africa, Sandton: Megawatt Park.

Taylor, T.R. (1992). Beyond competence: Measuring potential in a cross-cultural situation fairly: Potential in psychometrics: Part two. *Congress on Psychometrics for Psychologists.* Eskom and the Society of Industrial Psychology of South Africa, Sandton: Megawatt Park.

Taylor, T.R. (1994). A review of three approaches to cognitive assessment, and proposed integrated approach based on a unifying theoretical framework. *South African Journal of Psychology, 24*(4), 184-193.

Taylor, T.R. (1997). *Administrators manual for APIL BATTERY*. Auckland Park: AProLAB.

Taylor, T.R. (2006). *Technical manual for APIL BATTERY.* Auckland Park: AProLAB.

The global competitiveness index. (2009-2010). Retrieved June 6, 2009, from http://www.weforum.org/reports

The presidency of south africa, development indicators. (2008). Retrieved August 6, 2010, from http://www.thepresidency.gov.za/learning/me/indicators/2009/indicators.pdf

Tinio, F.M.R. (2009). Academic engagement scale for grade school students. *The Assessment Handbook, 2*, 64-75.

Todaro, M.P. (Ed.). (1994). *Economic development. (5th ed.).* New York: Longman.

Twyman, C.M. (2001). Finding justice south african labour law: The use of arbitration to evaluate affirmative action. *Journal International, 33*(3), 307-343.

Vancouver, J.B., & Kendall, L.N. (2006). When self-efficacy negatively relates to motivation and performance in a learning context. *Journal of Applied Psychology, 91*(5), 1146–1153.

VandeWalle, D., & Cummings, L.L. (1997). A test of the influence of goal orientation on the feedback-seeking process. *Journal of Applied Psychology, 82*, 390-400.

Van der Walt, H.S., Meiring, D., Rothmann, S., & Barrick, M.R. (2002, June). *Meta-analysis of the relationship between personality measurements and job performance in South Africa*. Paper presented at the Annual Conference of the Society for Industrial and Organisational Psychology of South Africa, Pretoria. Retrieved 5 February, 2011, from http://www.siopsa.org.za/2002Presentations/meiring%20vdwalt%20et%20al.doc

Verwoerd, W. (1999). Individual and/or social justice after apartheid? The south african truth and reconciliation commission. *The European Journal of Development Research, 11,* 115-140.

Vick. R.M., & Packard, B.W. (2008). Academic success strategy use among community-active urban hispanic adolescents. *Hispanic Journal of Behavioral Sciences, 30*(4), 463-480.

Vroom, V.H. (1964). *Work and motivation*. New York: Wiley.

Vroom, V.H. (1967). *Work and motivation.* USA: John Wiley & Sons, Inc.

Wadsworth, L.M., Husman, J., Duggan, M.A., & Pennington, M.N. (2007). Online mathematics achievement: Effects of learning strategies and self-efficacy. *Journal of Developmental Education, 30*(3), 6-14.

Walker, C.O., & Greene, B.A. (2009). The relations between student motivational beliefs and cognitive engagement in high school. *The Journal of Educational Research, 102*(6), 463-474.

Wang, M.C., Haertel, G.D., & Walberg, H.J. (1990). What influences learning? A content analysis of review literature*. Journal of Educational Research, 84*, 30–43.

Wexley, K.N., & Latham, G.P. (1981). *Developing and training human resources in organisations.* Glenview: Scott Foresman.

Wexley, K.N., & Baldwin.T.T. (1986). Post-training strategies for facilitating positive transfer: An empirical exploration. *Academy of Management Journal, 29,* 503-520.

Wigfield, A., & Eccles, J. (Eds.). (2002). *Development of achievement motivation.* San Diego: Academic Press.

Williams, S. (1997), Personality and self-leadership. *Human Resource Management Review, 7,* 139-155.

Wolters, A.C., & Pintrich, P.R. (1998). Contextual differences in student motivation and self-regulated learning in mathematics, english, and social studies classrooms. *Instructional Science, 26*, 27–47.

Woo, S.E., Harms, P.D., & Kuncel, N.R. (2007). Integrating personality and intelligence: Typical intellectual engagement and need for cognition. *Personality and Individual Differences, 43*, 1635–1639.

Woodruff, S.L., & Cashman, J.F. (1993). Task, domain, and general self-efficacy: A re-examination of the self-efficacy scale. *Psychological Reports, 72*, 423-432.

Zhu, X., Chen, A., Ennis, C., Sun, H., Hopple, C., Bonello, M., Bae, M., & Kim, S. (2009). Situational interest, cognitive engagement, and achievement in physical education. *Contemporary Educational Psychology, 34*, 221–229.

Zimmerman, B.J., & Martinez-Pons, M. (1986). Development of a structured interview for assessing students use of self-regulated learning strategies. *American Educational Research Journal, 23*, 614–628.

Zimmerman, B.J., & Schunk, D.H. (Eds.). (1989). *Self-regulated learning and academic achievement: Theory, research, and practice*. New York: Springer.

Zimmerman, B.J. (1990). Self-regulating academic learning and achievement: The emergence of a social cognitive perspective. *Educational Psychology Review, 2*, 173-201.

Zimmerman, B.J., Bandura, A., & Martinez-Pons, M. (1992). Self-motivation for academic attainment: The role of self-efficacy beliefs and personal goal-setting. *American Educational Research Journal, 29*, 663–676.

Zimmerman, B., & Kitsantas, A. (2007). Reliability and validity of self-efficacy for learning form (SELF) scores of college students. *Journal of Psychology, 215*(3), 157–163.

Ziori, E., & Dienes, Z. (2008). How does prior knowledge affect implicit and explicit concept learning? *The Quarterly Journal of Experimental Psychology, 61*(4), 601-624.

APPENDIX A

LEARNING POTENTIAL QUESTIONNAIRE

[SELF ASSESSMENT FORM]

LEERPOTENSIAAL-VRAELYS

[SELFASSESSERINGSVORM]

CONFIDENTIAL/ VERTROULIK

PARTICIPANT INFORMATION LEAFLET AND ASSENT FORM

TITLE OF THE RESEARCH PROJECT: MODIFICATION, ELABORATION AND EMPERICAL EVALUATION OF THE DE GOEDE LEARNING POTENTIAL STRUCTURAL MODEL

What is this research project all about?

The objective of the study is to modify and elaborate an existing theoretical model developed by De Goede (2007) with regards to differences in learning performance. The aim is therefore to elaborate on previous research in order to see how non-cognitive variable play a role in learning.

Why have I been invited to take part in this research project?

You were selected as a possible participant in this study because you have completed the first half of your grade 11 course and therefore are at the correct NQF level for me to use as a sample.

Who is doing the research?

You are asked to participate in a research study conducted by Richelle Burger (MComm) from the Department of Industrial Psychology at Stellenbosch University. The results of the study will be contributed to my master's thesis.

What will happen to me in this study?

If you volunteer to participate in this study, you will be asked to complete a short questionnaire that will take about 15-20 minutes. You will be asked to provide your name which is required to bring together the results of the questionnaire with your academic performance during the first half of grade 11 (i.e., term 1 and 2).

Can anything bad happen to me?

There are no foreseeable risks associated with participation in this research study. The results of the study will be treated as confidential. Only I, my master's supervisor and co-supervisor will have access to the data. Teachers at your school will not have access to the survey of any individual. The need to collate your survey results with your first-semester/half academic results prevents the completion of the survey to be anonymous.

Can anything good happen to me?

Participation in the research will not directly benefit you. The development of an elaborated learning performance structural model will, however, assist in the development of interventions aimed at facilitating successful learning.

Will anyone know I am in the study?

Any information that is obtained in connection with this study, and that can be identified with you, will remain confidential and will be disclosed only with your [and your parents'] permission or as required by law. Confidentiality will be maintained by means of restricting access to the data to me and my supervisor, by storing the data on a password-protected computer and by only reporting aggregate statistics for the sample. The results of the study will be disseminated by means of an unrestricted electronic thesis and by means of an article published in an accredited scientific journal. A summary of the research findings will be presented to teachers of the school. In none of these instances will the identity of any research participant be revealed nor will any academic results for any pupil be reported. Only aggregated statistics reflecting the proposed structural model's fit will be reported. The identity of the school will not be revealed in any of the publications.

Who can I talk to about the study?

If you have any questions or concerns about the research, please feel free to contact Richelle Burger (cell number: 083 764 8002 or richelleburger@yahoo.co.uk and/or Prof Callie Theron on 0218083009; ccth@sun.ac.za) both from the Department of Industrial Psychology of Stellenbosch University.

What if I do not want to do this?

You may refuse to take part in the study even if your parents have agreed to your participation. You may withdraw your consent at any time and stop participation without getting in trouble. You are not waiving any legal claims, rights or remedies because of your participation in this research study. If you have questions regarding your rights as a research subject, contact Ms Maléne Fouché (mfouche@sun.ac.za; 021 808 4622) at the Division for Research Development.

Do you understand what partaking in this research study entails and are you willing to take part in it?

YES	NO

Has the researcher answered all your questions?

YES	NO

Do you understand that you can pull out of the study at any time?

YES	NO

Name and Surname

_____

Grade

_____

Signature of learner Date

_____ _____

DEELNEMER INLIGTING EN INSTEMMING VORM

TITEL VAN NAVORSINGSPROJEK: VERANDERING, UITBREIDING EN EMPIRIESE EVALUERING VAN DIE DE GOEDE LEERPOTENSIAAL STRUKTURELE MODEL.

Waar oor handel hierdie navorsing?

Die doel van die studie is om die bestaande teoretiese model ontwikkel deur De Goede (2007) wat verskille in leerprestasie verduidelik, aan te pas en uit te brei. Die doel van die navorsing is om die leerprestasie van individue wat tot ontwikkelingsgeleenthede toegelaat is te fasiliteer.

Hoekom is ek gekies om in hierdie studie deel te neem?

Jy is gekies omdat jy klaar is met die eerste kwartaal van graad 11 en dus is jy op die regte NKR vlak om deel te wees van die steekproef.

Wie doen die navorsing?

Jy word gevra om aan ‘n navorsingstudie wat deur Richelle Burger uitgevoer word, deel te neem. Sy is van die Departement Bedryfsielkunde van die Universiteit Stellenbosch.

Wat sal met my gedurende hierdie studie gebeur?

As jy vrywillig aan hierdie studie deelneem sal jy gevra word om ‘n kort vraelys te voltooi. Dit sal omtrent 15-20 minute duur om te voltooi.

Kan enigiets negatiefs met my gebeur?

Daar is geen voorsienbare risiko’s wat verband hou met die deelname in hierdie navorsingstudie nie. Die resultate van die studie sal vertroulik hanteer word. Slegs ek, my studieleier en mede-studieleier sal toegang hê tot die data. Onderwysers by jou skool sal nie toegang hê tot vraelyste van enige individue nie. Die noodsaaklikheid om jou opname-response met jou akademiese uitslae in die eerste-semester in verband te kan, bring mee dat die vraelys nie anoniem voltooi kan word nie.

Kan enigiets positiefs met my gebeur?

Deelname aan die navorsing sal jou nie direk bevoordeel nie. Die ontwikkeling van ‘n uitgebreide leerprestasie-strukturele model sal egter bydra tot die ontwikkeling van intervensies wat gerig is op die fasilitering van suksesvolle leer in individue wat toegelaat is tot bemagtigende ontwikkelingsgeleenthede. Daar word gehoop dat deur bemagtigende ontwikkeling ‘n betekenisvolle

bydrae gemaak kan word om ten minste sommige van die misdrywe van die verlede in die opvoeding in Suid-Afrika te herstel.

Sal enigiemand weet dat ek deel neem aan die studie?

Enige inligting wat verkry is rakende die studie wat op jou van toepassing is, sal vertroulik bly en sal slegs bekendgemaak word met jou [en jou ouers] se toestemming of soos deur die wet vereis. Vertroulikheid sal gehandhaaf word deur toegang tot die data te beperk tot myself en my studieleiers deur die data te stoor op ‘n wagwoord-beskermde rekenaar en slegs opsommende statistiek van die opname bekend te maak. Die resultate van die studie sal versprei word deur middel van ‘n onbeperkde elektroniese tesis en deur middel van ‘n gepubliseerde artikel in ‘n geakkrediteerde wetenskaplike tydskrif. In geeneen van hierdie gevalle sal die identiteit van enige navorsingsdeelnemer bekend gemaak word of sal enige akademiese uitslae vir enige leerder bekend gemaak word nie. Die identiteit van die skool sal nie in enige publikasie bekend gemaak word nie.

Met wie kan ek praat oor die studie?

Indien jy enige vrae of probleme oor die navorsing het bel gerus vir Richelle Burger: 0837648002 (richelleburger@yahoo.co.uk) en/of Professor C Theron: 021 808 3009 (ccth@sun.ac.za). Hulle is albei van die Departement Bedryfsielkunde van die Universiteit Stellenbosch.

Wat sal gebeur as ek dit nie wil doen nie?

Jy kan weier om in die studie deel te neem selfs al het jou ouers tot jou deelname ingestem. Jy kan jou toestemming te enige tyd terugtrek sonder om in die moeilikheid te beland. Jy gee geen wetlike regte of voorregte prys deur aan hierdie navorsingstudie deel te neem nie. As jy enige vrae het in verband met jou regte as ‘n navorsingsdeelnemer, kan jy Me Malene Fouche kontak (021 808 4622 mfouche@sun.ac.za) by die Afdeling Navorsingsontwikkeling aan die Universiteit van Stellenbosch.

Verstaan jy waaroor hierdie studie handel en willig jy in om daaraan deel te neem?

JA	NEE

Het die navorser all jou vrae beantwoord?

JA	NEE

Verstaan jy dat jy enige tyd van die studie kan onttrek?

JA	NEE

Naam en Van

_____

Graad

_____

Leerling se tekening Datum

_____ _____

TIME COGNITIVELY ENGAGED

This section of the questionnaire is to provide an assessment of cognitive engagement. Cognitive (mental) engagement refers to the amount of time spent as well as the effort exerted on academic tasks.

Directions: Listed below is a set of statements about your first half of grade 11 (i.e., term 1 and 2). Please react to each statement as **honestly and truthfully** as possible. **There are no right or wrong answers**.

Indicate how often you performed the following behaviours described in the statements by crossing the number (from 0 to 6) that best describes how frequently performed the following behaviours in the first half of grade 11.

0 Never	1 Almost Never	2 Rarely	3 Sometimes	4 Often	5 Very Often	6 Always

For example: If you <u>never</u> performed the behaviour described in the statement, cross the box with the number 0.

0 Never	1 Almost Never	2 Rarely	3 Sometimes	4 Often	5 Very Often	6 Always

Read each statement carefully and choose only ONE answer!
Please respond to all questions

Statement	Never	Almost never	Rarely	Sometimes	Often	Very often	Always
1. I *spent enough time* on my academic work in the first half of grade 11to reach my learning/academic goals.	0	1	2	3	4	5	6
2. I *exerted enough cognitive effort* on grade 11 learning/academic work to reach my goals.	0	1	2	3	4	5	6
3. In my grade 11 class I actively listened and engaged with my teachers	0	1	2	3	4	5	6

	Never	Almost Never	Rarely	Sometimes	Often	Very Often	Always
4. In my grade 11 class I exerted effort to concentrate and understand what my teacher was saying.	0	1	2	3	4	5	6
5. I was intellectually/mentally engaged with what my teacher was saying in my grade 11 class.	0	1	2	3	4	5	6
6. I was intellectually/mentally engaged with my grade 11 study material outside of compulsory class times.	0	1	2	3	4	5	6
7. I would make sure that when I had set time aside to study I used my time efficiently and exerted effort to learn the material.	0	1	2	3	4	5	6
8. When I got down to work with regards to the first half of grade 11, I worked hard.	0	1	2	3	4	5	6
9. I forced myself to focus if my mind drifted off while I was studying.	0	1	2	3	4	5	6
10. I put enough time and effort into the first half of grade 11 to reach my grade 11 goals.	0	1	2	3	4	5	6
11. I was an active member of my grade 11 class.	0	1	2	3	4	5	6
12. I *listened* intensively/deeply in my grade 11 classes.	0	1	2	3	4	5	6
13. I *concentrated* in my grade 11 classes.	0	1	2	3	4	5	6

	Never	Almost Never	Rarely	Sometimes	Often	Very Often	Always
14. I actively participated in grade 11 academic group activities.	0	1	2	3	4	5	6
15. I kept myself focused when I learnt for my grade 11 tests.	0	1	2	3	4	5	6
16. When I was studying in the first half of grade 11 I really engaged with my grade 11 study material.	0	1	2	3	4	5	6
17. I TRIED NOT TO get distracted in class.	0	1	2	3	4	5	6

Please turn over to next page

ACADEMIC SELF-LEADERSHIP

This section of the questionnaire is to provide an assessment of self-leadership. Self-leadership refers to how you managed and lead yourself with regards to your first half of grade 11.

Directions: Listed below is a set of statements about your first half of grade 11 (ie., term 1 and 2). Please react to each statement as **honestly and truthfully** as possible. **There are no right or wrong answers**.

Indicate how often you performed the following behaviours described in the statements by crossing the number (from 0 to 6) that best describes how frequently performed the following behaviours in the first half of grade 11.

0 Never	1 Almost Never	2 Rarely	3 Sometimes	4 Often	5 Very Often	6 Always

For example: If you never performed the behaviour described in the statement, cross the box with the number 0.

0 Never	1 Almost Never	2 Rarely	3 Sometimes	4 Often	5 Very Often	6 Always

Read each statement carefully and choose only ONE answer!
Please respond to all questions

Statement	Never	Almost Never	Rarely	Sometimes	Often	Very Often	Always
1. I used my *imagination* to picture myself performing well on important grade 11 learning tasks before I actually did them.	0	1	2	3	4	5	6
2. I *visualized* myself successfully performing a grade 11 learning task before I did it.	0	1	2	3	4	5	6
3. I mentally rehearsed the way I planned to deal with a grade 11 learning challenge before I actually faced the challenge.	0	1	2	3	4	5	6

	Never	Almost Never	Rarely	Sometimes	Often	Very Often	Always
4. I wrote down specific learning goals for grade 11.	0	1	2	3	4	5	6
5. I consciously had my grade 11learning goals in mind when I studied.	0	1	2	3	4	5	6
6. I talked to myself (out loud or in my head) to *work through* difficult learning/academic problems in grade 11.	0	1	2	3	4	5	6
7. I found I was talking to myself (out loud or in my head) to help me *deal* with difficult learning/academic problems I faced in grade 11.	0	1	2	3	4	5	6
8. When I *did* a learning/academic assignment especially well, I would treat myself to something I liked or activity I especially enjoy.	0	1	2	3	4	5	6
9. When I successfully *completed* a grade 11 task, I would often reward myself with something I liked or activity I especially enjoy.	0	1	2	3	4	5	6
10. I evaluated/assessed the correctness of my beliefs and assumptions when I was in difficult situations.	0	1	2	3	4	5	6
11. I evaluate/assess my beliefs and assumptions when I had a disagreement with someone else.	0	1	2	3	4	5	6

	Never	Almost Never	Rarely	Sometimes	Often	Very Often	Always
12. I was tough on myself in my thinking when I did not do a grade 11 task well.	0	1	2	3	4	5	6
13. I got down on myself when I performed grade 11 tasks poorly.	0	1	2	3	4	5	6
14. I felt guilt when I performed grade 11 tasks poorly.	0	1	2	3	4	5	6
15. I made a point of keeping on track as to how well I was doing in my grade 11 work.	0	1	2	3	4	5	6
16. I was aware of how well I was performing my grade 11 activities.	0	1	2	3	4	5	6
17. I kept track of my progress on grade 11 work.	0	1	2	3	4	5	6
18. I focused my thinking on the pleasant rather than the unpleasant aspects of my grade 11 learning/academic work.	0	1	2	3	4	5	6
19. I surrounded myself with objects and people that brought out the learning behaviours I wanted in myself to help me learn.	0	1	2	3	4	5	6

20. I would try to find activities in my work that I enjoyed doing in order to get my work done.	0	1	2	3	4	5	6
21. I found my own favourite way to get my work done.	0	1	2	3	4	5	6
22. I used *written notes* to remind myself of the things I needed to get done.	0	1	2	3	4	5	6
23. I made *lists* to remind me of the things I needed to get done.	0	1	2	3	4	5	6

Please turn over to next page

ACADEMIC SELF-EFFICACY

This section of the questionnaire is to provide an assessment of academic self-efficacy. Academic self-efficacy refers to the belief you have in your academic ability.

Directions: Listed below is a set of statements about your first half of grade 11 (ie., term 1 and 2). Please react to each statement as **honestly and truthfully** as possible. **There are no right or wrong answers**.

Indicate how often you performed the following behaviours described in the statements by crossing the number (from 0 to 6) that best describes how frequently performed the following behaviours in the first half of grade 11.

Use the following responses:

0	1	2	3	4	5	6
Never	Almost Never	Rarely	Sometimes	Often	Very Often	Always

For example: If you <u>never</u> performed the behaviour described in the statement, cross the box with the number 0.

0	1	2	3	4	5	6
~~Never~~	Almost Never	Rarely	Sometimes	Often	Very Often	Always

Read each statement carefully and choose only ONE answer!
Please respond to all questions

Statement	Never	Almost Never	Rarely	Sometimes	Often	Very Often	Always
1. I felt that I was able to deal with my grade 11 work.	0	1	2	3	4	5	6
2. I believed if I tried hard enough I could solve difficult problems in my grade 11 course.	0	1	2	3	4	5	6
3. I needed reassurance during the first half of my grade 11 course with regards to the academic work.	0	1	2	3	4	5	6
4. I believed I could handle anything in the first half of my grade 11 course.	0	1	2	3	4	5	6

5. I was confident that I could cope efficiently with the first half of my grade 11 course.	0	1	2	3	4	5	6
6. I believed I could solve most problems with regards to the first half of my grade 11 course if I put in the necessary effort.	0	1	2	3	4	5	6
7. I believed I could handle the first half of my grade 11 course well.	0	1	2	3	4	5	6
8. I felt certain I could achieve the academic goals I set for myself inthe first half of my grade 11 course.	0	1	2	3	4	5	6
9. I believed I was capable of reaching the goals I set for the first half of my grade 11 course even when *times were tough*.	0	1	2	3	4	5	6
10. I felt secure about my ability to reach the goals I set for the first half of my grade 11 course.	0	1	2	3	4	5	6
11. I felt capable of dealing with most problems that came up in grade 11.	0	1	2	3	4	5	6
12. I felt I would get good grades in grade 11if I tried hard enough.	0	1	2	3	4	5	6

Please turn over to next page

CONSCIENTIOUSNESS

This section of the questionnaire is to provide an assessment of conscientiousness. Conscientiousness refers to the trait of being meticulous self-disciplined, careful, thorough, organised, and deliberating carefully before acting.

Directions: Listed below is a set of statements about your first half of grade 11 (ie., term 1 and 2). Please react to each statement as **honestly and truthfully** as possible. **There are no right or wrong answers**.

Indicate how often you performed the following behaviours described in the statements by crossing the number (from 0 to 6) that best describes how frequently performed the following behaviours in the first half of grade 11.

Use the following responses:

0 Never	1 Almost Never	2 Rarely	3 Sometimes	4 Often	5 Very Often	6 Always

For example: If you <u>never</u> performed the behaviour described in the statement, cross the box with the number 0.

0 Never	1 Almost Never	2 Rarely	3 Sometimes	4 Often	5 Very Often	6 Always

Read each statement carefully and choose only ONE answer!
Please respond to all questions

Statement	Never	Almost Never	Rarely	Sometimes	Often	Very Often	Always
1. I was always prepared in grade 11.	0	1	2	3	4	5	6
2. I paid attention to details.	0	1	2	3	4	5	6
3. My parents and/or teachers NEEDED TO CHECK UP ON ME in order for me to get started with my work in the first half of grade 11.	0	1	2	3	4	5	6

	Never	Almost Never	Rarely	Sometimes	Often	Very Often	Always
4. I got my grade 11 tasks done efficiently and effectively.	0	1	2	3	4	5	6
5. I successfully completed the first half of my grade 11 tasks in the manner I planned to.	0	1	2	3	4	5	6
6. When I made plans with regards to the first half of grade 11 I stuck to them.	0	1	2	3	4	5	6
7. I planned my study time.	0	1	2	3	4	5	6
8. I was thorough in my academic work.	0	1	2	3	4	5	6
9. I got my academic work competed on time.	0	1	2	3	4	5	6
10. I developed a study timetable to guide my studying.	0	1	2	3	4	5	6
11. I stuck to my developed study timetable.	0	1	2	3	4	5	6
12. The study timetable I set up was well organised.	0	1	2	3	4	5	6

Please turn over to next page

LEARNING MOTIVATION

This section of the questionnaire is to provide an assessment of learning motivation. Learning motivation refers to the specific desire to learn the content of the curriculum relevant to of grade 11.

Directions: Listed below is a set of statements about your first half of grade 11 (ie., term 1 and 2). Please react to each statement as **honestly and truthfully** as possible. **There are no right or wrong answers**.

Indicate the extent to which you agree or disagree with the following statements by crossing the number (from 1 to 7) that best describes your behaviours in the first half of grade 11.

Use the following responses:

1 Strongly Disagree	2 Disagree	3 Slightly Disagree	4 Neither Agree nor Disagree	5 Slightly Agree	6 Agree	7 Strongly Agree

For example: If you <u>strongly disagree</u> with one statement, cross the box with the number 1.

~~1 Strongly Disagree~~	2 Disagree	3 Slightly Disagree	4 Neither Agree nor Disagree	5 Slightly Agree	6 Agree	7 Strongly Agree

Read each statement carefully and choose only ONE answer!
Please respond to all questions

Statement	Strongly Disagree	Disagree	Slightly Disagree	Neither Agree Nor Disagree	Slightly Agree	Agree	Strongly Agree
1. I intended to increase my knowledge during the first half of grade 11.	1	2	3	4	5	6	7
2. When I didn't understand some part of the first half of grade 11course I tried harder for example by asking questions.	1	2	3	4	5	6	7
3. I was willing to exert considerable effort in order to enhance my knowledge and understanding during the first half of grade 11.	1	2	3	4	5	6	7

4. I wanted to learn as much as I could during the first half of grade 11.	1	2	3	4	5	6	7
5. I was motivated to learn the work covered in the first half of grade 11.	1	2	3	4	5	6	7
6. I intended to do my best in the first half of grade 11.	1	2	3	4	5	6	7

THANK YOU!